☐ XPL800
☐ XPL1000
☐ XPL1200
☐ XPL1500

XPL

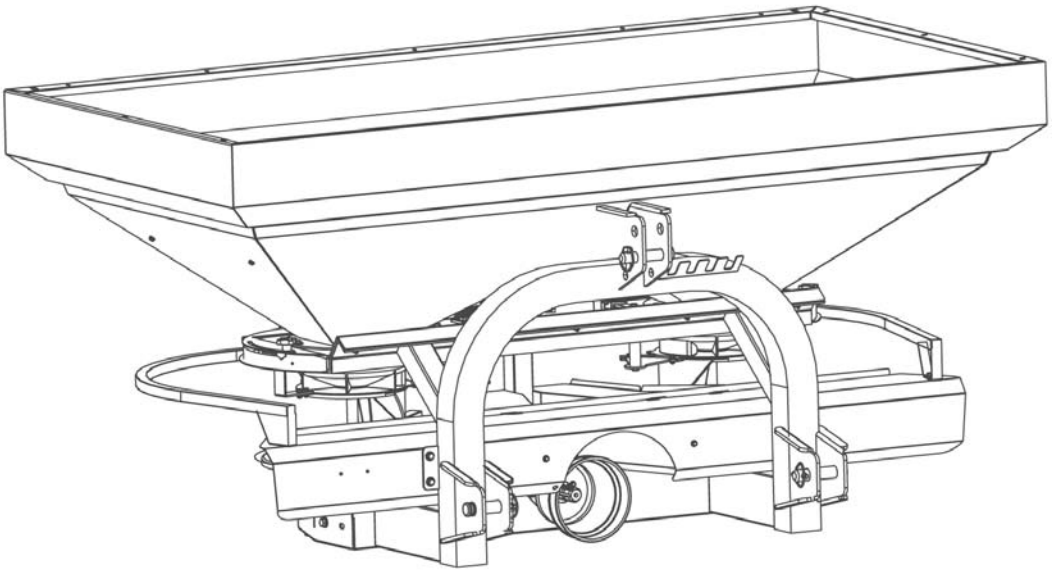

USER'S GUIDE

TRANSLATION OF THE ORIGINAL INSTRUCTIONS

Via Balla, 55/57 – 35010 Villafranca Padovana (PD)
Tel. +39 049 9075684 – Fax +39 049 9075524

SUMMARY

Via Balla, 55/57 – 35010 Villafranca Padovana (PD)
Tel. +39 049 9075684 – Fax +39 049 9075524

Via Balla, 55/57 – 35010 Villafranca Padovana (PD)
Tel. +39 049 9075684 – Fax +39 049 9075524

1 SECTION – Generality

1.1 Presentation

This manual gives information, instructions and everything else you will need to understand, correctly operate and perform routine maintenance on spreaders mod. **«XPL»**, hereinafter also referred to as the machine, and of all the accessories produced by **AGREX Spa of Villafranca Padovana (Padua) Italy**, hereinafter also referred to as the Manufacturer.

You will not find a complete description of the various parts, or a detailed explanation of how they work herein. Nonetheless, you will find all the information you will usually need to operate the machine safely and to look after it properly.

Compliance with the instructions herein, together with careful, meticulous maintenance, is the only way to assure proper operation, lasting service and economic running of the machine.

Failure to comply with the provisions herein, negligent operation, incorrect use of the machine or performance of unauthorized changes may lead to the Manufacturer declaring its warranty covering the machine void.

THE MANUFACTURER ALSO DECLINES ANY RESPONSIBILITY FOR DAMAGES AS A RESULT OF THE ABOVE-MENTIONED ACTIONS OR FOLLOWING FAILURE TO COMPLY WITH THE INSTRUCTIONS HEREIN.

For any repairs or overhauls entailing operations of some complexity, you must contact an authorized Customer Support Centre with specialized personnel, or the actual Manufacturer, who will be glad, in any case, to assure prompt, accurate technical servicing and anything else required to restore the machine to full working order.

WARNING

This manual is an integral part of the machine and must be kept with the machine at all times, even when it is moved or sold. It must be kept in a safe place where personnel in charge of work on the machine know where to find it. Said personnel must look after it and keep it intact for future reference for the entire duration of the machine's service life.

If it is damaged or misplaced, you must ask the Manufacturer for a copy without delay.

Who the manual is intended for

This manual is an essential tool for personnel who, in their various capacities, are somehow involved with the machine.

The various job profiles are given below:

USER: A user is the person, or body, or company who has purchased or hired the plant and who intends to use it for its intended purposes. They are responsible for the machine and for the training of anyone involved with it.

OPERATOR: skilled technical personnel sent by AGREX S.p.A. to install the machine and train operators. Technicians are able to perform operations of a complex nature on the plant, or any work in unusual situations.

Via Balla, 55/57 – 35010 Villafranca Padovana (PD)
Tel. +39 049 9075684 – Fax +39 049 9075524

1.1 Condition of guarantee

- The seller guarantees that the parts of the product are new, designed and manufactured so as to meet the specific technical characteristics of the product itself.

- The guarantee period is 12 months (twelve months) if the purchaser is a judicial entity (so-called "B to B sale", i.e. "business to business") or 24 months (twenty-four months) if the purchaser is a consumer (so-called "B to C sale"). The guarantee takes effect starting from the date of delivery of the product and, more specifically, from the date of the signature of the test certificate, if the machine has been tested, or from the date of the shipping document, in all other cases. In "B to B" sales, the guarantee period may not in any case exceed 18 months from the date the machinery is shipped.

- At the moment of delivery, the purchaser is required to check that the machine is in good condition and complete with all its parts.

- If the product has damage or defects which occurred during the guarantee period, the purchaser is required to inform the seller, in writing, of the existence and the extent of said damage or defects no later than 5 (five) days form the moment they are discovered, in "B to B" sales.

- The guarantee provides exclusively the right to free replacement or repair of the defective parts, which will be considered as such after careful examination by the seller's technical department. Shipping costs shall be at the expense of the seller, who shall select the method of shipment based on his own unquestionable judgment.

- Replacement or repair of parts covered by the guarantee shall not in any case extend the terms thereof.

- Under no circumstances shall the purchaser be entitled to the repair of the machinery or of the single components if full payment of the agreed amount has not been made.

Voidance of the guarantie

- This guarantee shall automatically be voided if the product undergoes interventions, modifications, or is used by technicians or staff who are not authorized in writing by the seller.

- This guarantee does not cover the replacement of the parts that are subject to normal wear and spare parts. Any additional costs, such as travel expenses, shipping and/or labour costs, are not covered by said guarantee.

- The guarantee shall not in any circumstance include loss of profits or any direct or indirect consequence thereof.

- The guarantee is automatically voided (in addition to the provisions in the supply contract) if:
  a) non-original spare parts are used;
  b) the damage is attributable to an erroneous operation performed by the purchaser and/or his personnel;
  c) the damage is caused by insufficient maintenance;
  d) the user carries out repairs at his discretion without the consensus of the manufacturer;
  e) the instructions included in this manual are not carried out;
  f) exceptional event;
  also
  g) THE REMOVAL OF THE SAFETY DEVICES WITH WHICH THE MACHINE IS EQUIPPED WILL AUTOMATICALLY VOID THE GUARANTEE AND RELIEVE THE MANUFACTURER OR ANY LIABILITY.

The retailer shall not be liable for damage due to negligence, carelessness, poor utilization and improper use of the machine and all of its parts that are subject to normal wear during operation, lack of skill and care-

Via Balla, 55/57 – 35010 Villafranca Padovana (PD)
Tel. +39 049 9075684 – Fax +39 049 9075524

lessness of the purchaser or his employees and/or of the final client/user and/or his employees, to unacceptable overloads, to inadequate means and/or operating materials, to defects of the foundations and structures of the building (if the machinery requires certain characteristics of the place in which the it is to be located and installed, to inadequate means and/or materials of operation and to any other activity which is extraneous or not compliant with normal use of the product or to its specific technical characteristics or damage caused by modifications and/or repairs, replacements of single components, maintenance carried out by personnel not authorized in writing by the seller or any circumstance independent of the seller, as well as negligence or lack of skill in assembly by the purchaser and/or the final client/user.

1.2 Customer service

DANGER

PERFORMING REPAIRS, WORK OR CHANGES OF ANY KIND OTHER THAN THOSE INDICATED HEREIN IS STRICTLY PROHIBITED.

Requests for servicing must be forwarded straight to the Technical Servicing Centre authorized by **AGREX SPA**, which will send skilled personnel and provide any necessary information and explanationùs.

When applying, remember to quote:

- Machine type
- Serial number and year of manufacture
- Type of problem encountered

Via Balla, 55/57 – 35010 Villafranca Padovana (PD)
Tel. +39 049 9075684 – Fax +39 049 9075524

2 SECTION – General features

2.1 Machine markings

Each machine features an identification plate (Pic. 1), whose data are given below:

- **(A) MANUFACTURER**
- **(B) ABSORBED POWER**
- **(C) MAXIMUM LOADING**
- **(D) WEIGHT WHEN EMPTY**
- **(E) MODEL**
- **(F) SERIAL NUMBER**
- **(G) YEAR OF MANUFACTURE**

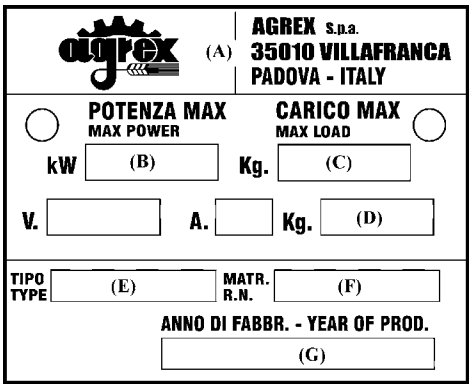

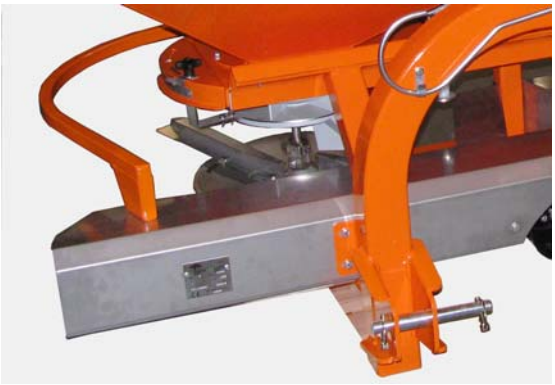

Picture 1

Removing, replacing or in any way altering the identification plates on the machine or any accessories it comes with is strictly prohibited.

The machine is supplied with:

- «Operation and maintenance manual»
- «Manufacturer's declaration of conformity»

Via Balla, 55/57 – 35010 Villafranca Padovana (PD)
Tel. +39 049 9075684 – Fax +39 049 9075524

2.1.1 Spreader description

The spreader consists of:

1- **Frame**
2- **Gear box**
3- **Hopper**
4- **Hydraulic control**

The XPL series spreaders have been conceived to spread different types of fertilizers, as well as seeds, salt and granulated materials in general.

It is strictly forbidden to spread iron pieces, stones, grivel, glass and similar materials as they may injure people and cause damages.

- The fertilizer spreader is equipped with a regulation system that allows carrying out a spreading that varies from 12 to 24 meters.
- The system that controls the fertilizer spreading is composed by an adjustable lock gate that assures the best accuracy in the spreading and in the dosing also with superconcentrated products and seeds.
- **Easy to charge:** the models XPL 800, XPL 1000, XPL1200 and XPL 1500 are 105 cm, 115 cm, 125 and 141 cm high respectively.
- **Highest safety standards:** all rotating and transmission parts are protected by guards and protection devices in compliance with CE provisions.
- **Simple design and functioning: by moving sideways the adjusting lever it is possible to obtain three different spreading patterns: afull with 180° spreading pattern and 90° spreading pattern to the left or to the right.**

A single worker can do himself all the necessary operations by himself

Picture 2

Via Balla, 55/57 – 35010 Villafranca Padovana (PD)
Tel. +39 049 9075684 – Fax +39 049 9075524

2.1.2 Scheduled use

The machine has been built in conformity with European Union standards given in directive 2006/42/EC as described in the manufacturer's declaration supplied with each machine.

The machine is designed to be used ideally for sowing and fertilising of gardens, sports fields and small green areas.

The following can be spread:

- **solid mineral fertilisers in granular or powder form**
- **seeds**
- **salt and sand**

The machine should be carried and driven by tractors or self-propelled machines with a power suitable to the spreader weight when it is completely full.

The machine must be operated only outdoors and when visibility is sufficient to see where the product is being spread.

The machine is designed for professional use and the operators in charge must be certified fit and be able to read and understand the contents of this manual.

Operators must also use the machine in compliance with the current regulations concerning safety, conditions for use and characteristics of the machine.

2.1.3 Non-scheduled use

NEVER spread materials not specified in this manual: this would affect the safety of the machine users and persons working nearby.

NEVER disable the machine safety devices or remove the danger notices.

NEVER allow the machine to be used by disabled persons or children.

DO NOT transport people or animals during work and when moving the machinery from one place to another.

Consequently, the manufacturer shall NOT BE held responsible for any damage to equipment or property or bodily injury as a result of its improper use or any use other than that for which the machine is intended.

2.2 Control devices

To start or to stop the exit of the product from the hopper you have to operate on the botton "open" and "close" in the tractor hydraulic circuit. As for the regulation of the spreading the machine is equipped with the following control levers;

Product quantity control levers: they are on the machine sides. If you push the lever toward the tractor you can increase the quantity of fertilizer to spread, whereas if you pull the lever you can decrease the quantity of product spread until it is completely closed

Spreading control lever: They are under the hopper in the rear part of the spreader. Moving the lever toward the center the width of the spreading will decrease; moving the lever outward the width of the spreading will increase.

Via Balla, 55/57 – 35010 Villafranca Padovana (PD)
Tel. +39 049 9075684 – Fax +39 049 9075524

2.3 Technical data

Model	**XPL 800**	**XPL 1000**	**XPL 1200**	**XPL 1500**
Capacity (l)	800	1000	1200	1500
Maximun loading (kg)	1500	1500	1500	1500
Weight when empty (kg)	230	247	264	290
Spreading width (m)	12 – 24	12 – 24	12 – 24	12 – 24
A Lenght (cm)	120	120	120	120
B Width (cm)	215	215	215	215
C Height (cm)	105	115	125	141
Tractor power required (HP)	110 – 130	110 – 130	110 – 130	110 – 130

Chart 1

Max P.T.O. speed: 540 rpm

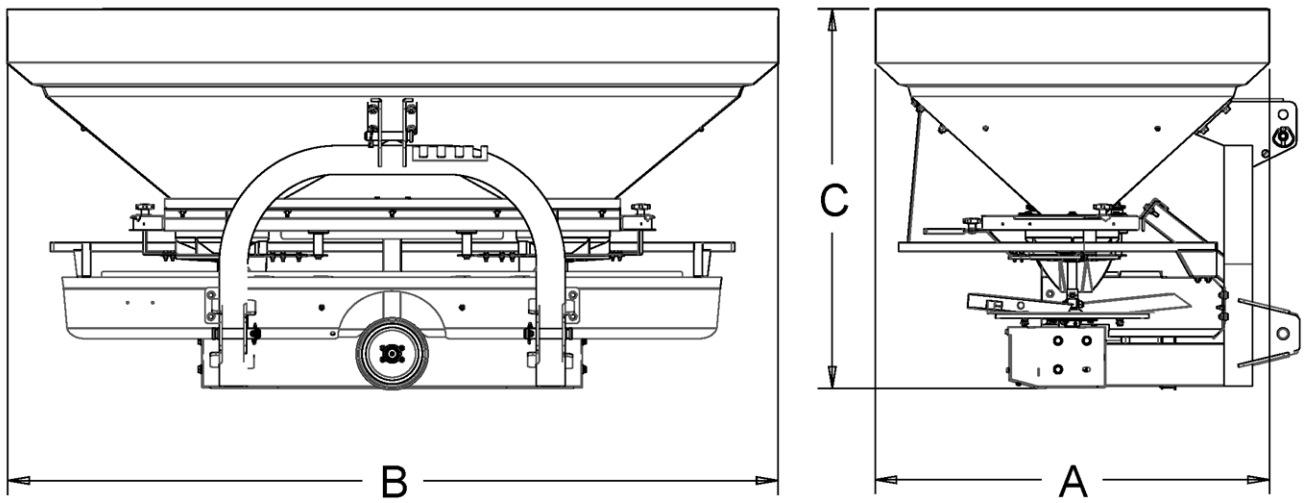

Picture 3

2.4 Standards applied

The machine has been designed and produced in conformity with the provisions of directive 2006/42/EC, namely all moving parts have been made harmless by using guards, barriers and safety systems.

The machine has also been designed to the following directives and standards:

EN 14017:2005 +A2:2009 Agricultural and forestry machinery – Solid fertilizer distributors – Safety (2005)

EN ISO 4254-1:2009 Agricultural machinery -- Safety -- Part 1: General requirements

ISO 11684:1995 Tractors, machinery for agriculture and forestry, powered lawn and garden equipment - Safety signs and hazard pictorials - General principles. (1995)

Via Balla, 55/57 – 35010 Villafranca Padovana (PD)
Tel. +39 049 9075684 – Fax +39 049 9075524

3 SECTION – Safety and accident prevention

3.1 Safety

The user must instruct personnel as to risks deriving from accidents, devices installed for the purpose of operator safety, and general safety rules provided for by directives and legislation in the country where the machine is being used.

Operator safety is one of the primary concerns of any machine manufacturer. When producing a new machine, every effort is made to allow for all potential hazardous situations and, of course, to adopt appropriate safety devices.

Nonetheless, the level of accidents caused by careless and inexpert use of various machines is still very high.

Lack of attention, thoughtlessness and overconfidence often lead to accidents, as can fatigue and drowsiness.

Hence this manual must be read very carefully, concentrating in particular on the section on safety rules.

WARNING

The Manufacturer declines all responsibility for failure to comply with safety and accident-prevention regulations provided for by legislation, and with the provisions herein

DANGER

WATCH OUT FOR THIS SYMBOL IN THE MANUAL: IT INDICATES A HAZARDOUS SITUATION.

Depending on the danger involved, this symbol may have one of three meanings:

DANGER

The **"DANGER"** label indicates the highest level of danger and is intended to warn you that if the operations described are not performed properly, they will result in serious injury, death or long-term health risks.

WARNING

The **"WARNING"** label warns you that if the operations described are not performed properly, they may result in serious injury, death or long-term health risks.

CAUTION

The **"CAUTION"** label warns you that if the operations described are not performed properly, they may result in damage to the machine and/or injury.

Via Balla, 55/57 – 35010 Villafranca Padovana (PD)
Tel. +39 049 9075684 – Fax +39 049 9075524

IN ACCORDANCE WITH OF THE DIRECTIVE 2006/42/CE NOTE THE FOLLOWING CONVENTIONS:

DANGER ZONE: means any zone within and/or around machinery in which a person is subject to a risk to his health or safety.

EXPOSED PERSON: means any person wholly or partially in a danger zone

OPERATOR: means the person or persons installing, operating, adjusting, maintaining, cleaning, repairing or moving machinery.

3.1.1 General safety rules

DANGER

Failure to comply with the provisions of **"Section 3 - Safety and accident prevention"** and any tampering with safety devices shall relieve the Manufacturer of any responsibility in case of accident, damage or malfunctioning of the machine.

GENERAL WARNINGS:

• The user undertakes to entrust the machine only to qualified and suitably trained personnel.

• The user is required to take all necessary measures to ensure that unauthorized personnel have not access to the machine.

• The user undertakes to suitably instruct his personnel on the application and observance of safety rules. For this reason, he undertakes to ensure that all persons receive directions for using the machine and safety rules appropriate to their tasks.

• The user must contact the Manufacturer to report any defects or malfunctions detected in safety systems, as well as any situation presumed to be dangerous.

• The user at all times, must use personal protective gear provided for by legislation, and follow the instructions herein.

• The user must comply with all safety symbols and warnings applied on the machine.

• The user must not take their own initiative to perform operations or work outside their area of competence.

• The user are required to report to their superior any problems or hazardous situation encountered to their superiors.

• The machine has been tested only with the equipment supplied only. Fitting parts of different makes or making changes may alter the machine's characteristics and hence compromise its safe operation. Consequently, the Manufacturer declines any responsibility for any damage that might derive from use of non-original parts.

• The machine must be used only for the purpose for which it has been designed alone.

• The machine must not be run with safety devices removed.

Via Balla, 55/57 – 35010 Villafranca Padovana (PD)
Tel. +39 049 9075684 – Fax +39 049 9075524

3.1.2 Safety signs

The machine has been produced adopting every possible safety standard to assure operator safety.

Nonetheless, the machine may present further residual hazards that cannot be eliminated altogether under certain conditions of use.

The safety symbols (pictograms) applied on various points of the plant are intended to draw the user's attention and warn him/her of danger: consequently, it is necessary to know the meaning of said symbols and to memory them. Any symbols that have been damaged, misplaced or belong to parts that have been changed must be replaced with other original symbols, requesting them to from the Manufacturer, and must be applied in exactly the same place.

DANGER

KEEP ADHESIVES CLEAN, AND REPLACE THEM AS SOON AS THEY START PEELING OFF OR ARE DAMAGED.

Referring to figure read the following descriptions carefully, committing their meanings to memory.

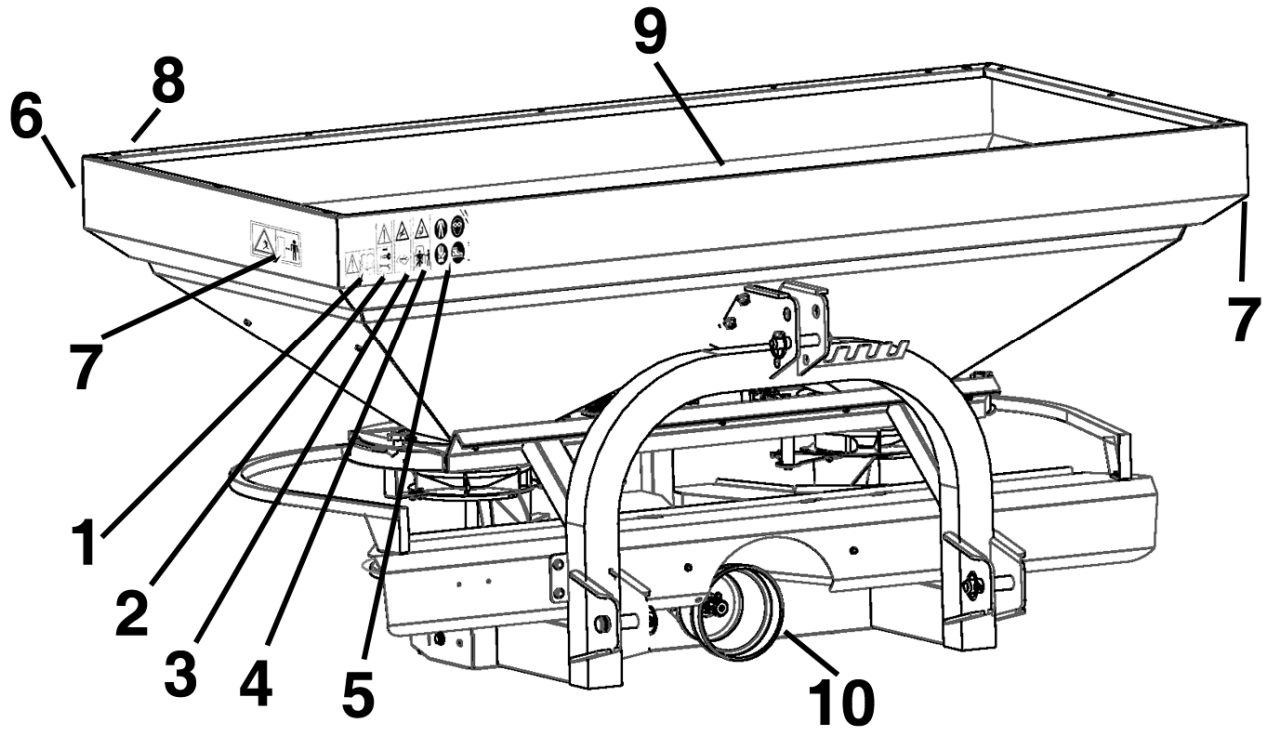

Picture 4

Via Balla, 55/57 – 35010 Villafranca Padovana (PD)
Tel. +39 049 9075684 – Fax +39 049 9075524


1


2


3

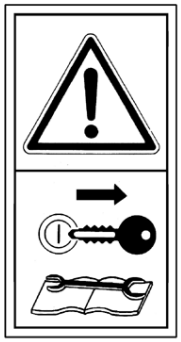
4


5


6


7


8


9

10

1. Warning! Risk of crushing; do not stand between the machine and the tractor.
2. Warning! Risk of injury by pressurised liquids; read the Operation and Maintenance Manual before proceeding to operations on the machine.
3. Warning! Read the Operation and Maintenance Manual carefully.
4. Warning! Before performing any maintenance operations, remove the tractor's ignition key and read the Operation and Maintenance Manual.
5. Always wear a work suit, safety gloves and safety shoes. Always wear safety goggles during machine loading and maintenance operations.
6. Warning! Distribution parts in movement; never enter the hopper while the machine is running.
7. Warning! Keep a safe distance from the machine; risk of sprayed product.
8. Warning! Risk of falling, do not mount the machine for purposes of transportation.
9. This indicates the coupling point to be used for machine lifting.
10. Warning! Never exceed a value of 540 rpm in the power takeoff.

Via Balla, 55/57 – 35010 Villafranca Padovana (PD)
Tel. +39 049 9075684 – Fax +39 049 9075524

3.2 Safety devices

The machine features **GUARDS**: Stationary devices that prevent direct contact with moving parts or any other hazardous part of the machine. Said guards can be removed only with the aid of special tools. When the machine is operating, said devices must be fitted correctly.

CONSEQUENTLY, THE MANUFACTURER DECLINES ALL RESPONSIBILITY FOR ANY DAMAGE RESULTING FROM TAMPERING WITH GUARDS AND SAFETY DEVICES.

3.3 Noise hazard

Sound level (airborne noise) measured from one metre away with the machine running was as follows:

Sound pressure at the operator's position measured according to EN ISO 4254-1:2009 Standard - Appendix B.

$$L_{pA} = 83.5 \text{ dB(A)}$$

3.4 Dust hazard

WARNING

When spreading powder fertilisers, dust can form in the air especially when it is windy. You are therefore advised to wear a mask to protect the respiratory system.

Fertilisers in general can irritate the skin and eyes: contact the supplier for information on the personal protection measures to be adopted.

3.5 Clothing

WARNING

Wear suitable clothing. Avoid baggy, loose-fitting clothing: It might get caught up in moving parts. Long hair should be tied back. Operators should not carry scissors or sharp tools in their pockets.

During maintenance and repair work, workers are required to wear protective clothing, cut-proof gloves, and non-slip boots with reinforced

3.6 Ecology and pollution

WARNING

• Comply with laws in force in the country where the machine is being used regarding use and disposal of products employed in cleaning and servicing the machine, and comply with the instructions issued by the manufacturers of said products.

Via Balla, 55/57 – 35010 Villafranca Padovana (PD)
Tel. +39 049 9075684 – Fax +39 049 9075524

• Dispose of any special waste by handing waste materials in to suitably authorized firms, and demand a receipt attesting the disposal.

• Dispose of any packaging left over from the machine's transport in conformity with the regulations in force.

• If the machine is to be dismantled, comply with the pollution-prevention regulations provided for by the country it is used in, exercising particular care when it comes to lubricants and electric components.

• Collect all spent products from the hydraulic circuits in appropriate containers. Deliver all spent oil recovered to authorised collection centres (spent oil consortiums).

3.7 Safe use

WARNING

Safety standards: HOW TO AVOID ACCIDENTS

• To avoid accidents, pay close attention to the warning notices affixed on the machine and read this guide carefully.

• The use of the spreader is restricted to the fuctions, for which it has been designed and which are described in the present guide. The manufacturer will not be held responsible for any damages to things or injuries to people caused by a wrong use of the spreader.

• Before starting the spreader, make sure all protection devices and guards are mounted correctly.

• Make sure no bystanders (especially children) or animals are in the working area. This is extremely important when the spreader is being used near pubblic or easily accessible roads.

• Minors (under 18) are not allowed to operate the spreader.

• The spreader can be used with every kind of tractor of suitable power, whose couplings are compatible with those of the spreader and which is equipped with all P.T.O. and cardan shaft protection devices.

• Before connecting the P.T.O., make sure the revolution number of the tractor corresponds to that of the spreader. In any case, **never exceed 540 rpm**.

• It is strictly forbidden to spread iron pieces, stones, grivel, glass and similar materials as they may injure people and cause damages to things.

• Never load the hopper with wet products as they may obstruct the outlets.

• During work, wear close-fitting and laced-up garments, heavy safety shoes, and safety gloves and mask especially while spreading powdery fertilizers in windy weather.

• After using the spreader, turn the engine off, apply the handbrake, lower the spreader to the ground, disengage the P.T.O. and, if the hopper is still partially full, even the product up in order to avoid accidental tippings.

• Do not carry out any maintenance or cleaning operation while the spreader is connected to the 3-point hitch of the tractor.

• It is strictly forbidden to transport persons while the spreader is in operation or during transfers.

• During transfers, make sure the P.T.O. is disengaged.

Via Balla, 55/57 – 35010 Villafranca Padovana (PD)
Tel. +39 049 9075684 – Fax +39 049 9075524

• When travelling on public roads, connect the spreader to the tractor as described on the present guide. A wrong connection may alter the vehicle stability. It is necessary to abide by the national traffic code.

• We remind you that a careful operator is the best insurance against accidents.

• The area the machine is used in should be considered a **«DANGER ZONE»**, especially for anybody not trained in its use.

• Be careful of people and animals in the machine operating range: this is important when working on land or roads open to the public.

• When people are «exposed», i.e. are in the «DANGER ZONE», the operator must stop the machine instantly, and possibly have the person removed.

• Whilst the machine is operating, operators must be in a position where they have full control of the machine so that they can take immediate action at any time and in any event.

• Check periodically the machine as a whole, and its safety devices, at regular intervals to ensure they are intact.

• If safety guards are removed, make sure they are refitted properly before using the machine again..

• Maintenance or repair work must be performed by personnel qualified for the specific tasks.

• At the end of maintenance and repair work, before re-using the machine the technical manager must ensure that the work has been completed and that the protections have been re-fitted.

• Transport of persons or animals during work and when moving the machine from one place to another is strictly forbidden.

• Regularly check the condition of the protections for the cardan shaft, bearing in mind that only cardan shafts with protections in good condition must be used.

• Never enter the hopper with the fertilizer spreading devices in motion.

• In order to avoid the formation of lumps of fertilizer and the clogging of the hopper, do not spread fertilizer on extremely humid or rainy days (if necessary, use the hopper-cover tarpaulin provided as an optional). Whenever clogging occurs, immediately switch off the machine to avoid damaging the fertilizer spreading devices. Remove lumps of fertilizer only after first switching off the tractor. Wear personal protective equipment (safety gloves, goggles) during machine cleaning operations.

• Use cranes with adequate load capacity to load fertilizer sacks weighing more then 30 kg.

• Always use the loading platform during all loading operations (the use of the loading platform is foreseen for Model XPL 1500).

Via Balla, 55/57 – 35010 Villafranca Padovana (PD)
Tel. +39 049 9075684 – Fax +39 049 9075524

4 SECTION - Handling and installation

CAUTION

The fertiliser spreader and accessories are generally partially fitted at the factory and shipped in cardboard packaging or on pallet. To complete assembly, follow the instructions given in this manual.

In some cases, depending on customer requirements, the machine is delivered fully assembled.

Upon receipt of the goods, carefully check to ensure that no damage has occurred during transport.

4.1.1 Assembly of hopper extensions

WARNING

Before proceeding to hopper extension assembly/disassembly, uncouple the fertilizer spreader from the tractor and make sure that the fertilizer spreader is parked on solid, level ground.

Wear safety gloves and safety shoes for all the operations below.

Proceed as follows to assemble hopper extensions:

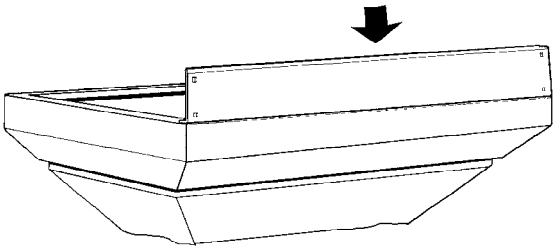

1. Fasten the longer lifting panel to the front part of the fertilizer spreader. Do not tighten the fixing screws all the way at this point.

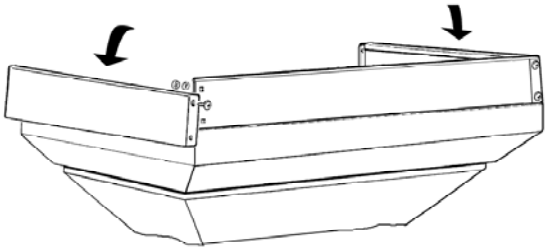

2. Fasten the two lateral panels

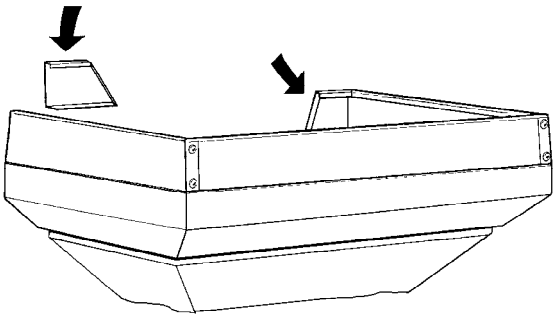

3. Fasten the rear angle bars.

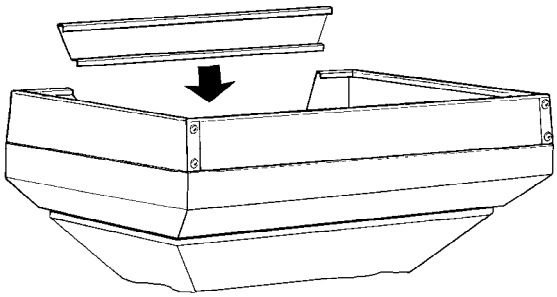

4. Fasten the rear lifting panel.

Via Balla, 55/57 – 35010 Villafranca Padovana (PD)
Tel. +39 049 9075684 – Fax +39 049 9075524

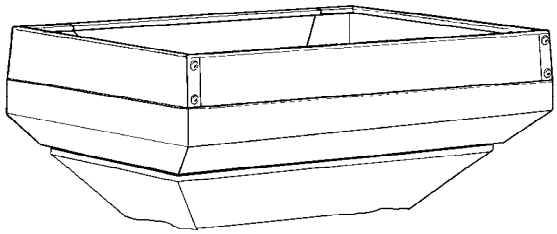

5. Tighten all screws in order to solidly connect the hopper extension to the standard hopper.

4.2 Handling

The packages must be handled by lift truck only, adequate for the weight to be lifted.

If the machine is not immediately assembled and temporary storage is required, the machine must be kept in a dry covered place.

To protect the various parts from atmospheric agents you are advised to leave the packaging intact.

In order to correctly lift the fertilizer spreader, make sure that it has been adequately connected to the lifting points indicated in the figure.

Lift the machine only when the hopper is empty.

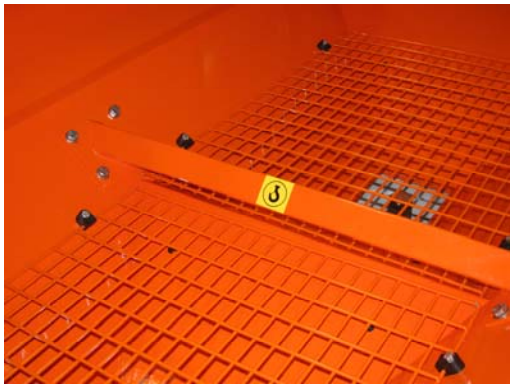

1. Fertilizer spreader lifting point.

2. Type of harness to be made using a cable adequately sized to the weight of the load to be lifted (see Technical Data).

4.3 Hitching

WARNING

The spreader can be hitched to any tractor of suitable power (see technical specifications).

Before hitching the spreader to the tractor, apply the handbrake and make sure the P.T.O. is disengaged. Wear safety gloves.

Via Balla, 55/57 – 35010 Villafranca Padovana (PD)
Tel. +39 049 9075684 – Fax +39 049 9075524

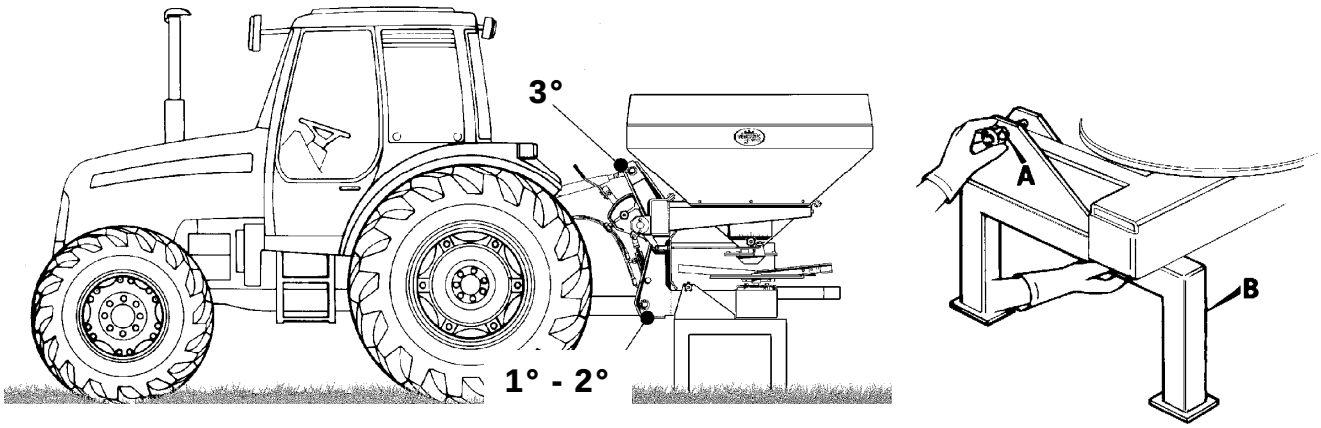

Picture 5

1 - Apply the minimum front ballast to the tractor (see Appendix A).

2 - Fix de lower bars of the tractor lifting machanism to the lower couplings of the spreader (Pic. 5) and then secure with safety pins**.**

3 - Connect the upper bar of the 3-point hitch with the suitable pin and safety split pin.

4 - To increase the machine firmness, fasten the lower bars of the 3-point hitch with the suitable tie-rods.

5 - Place the drive-shaft, making sure the backstop has been relased at the power takeoff and that the screw on the drive-shaft of the fertilizer spreader is locked. Read the handbook of the drive-shaft

6 - Lift the spreader from the ground using the tracctor liftiing bars. Release the two support feet B by un-screwing the respective locking handwheels A.

When the P.T.O. shaft is a maximun exstention, the two inner tubes have to overlap at least 15-20 cm. When the P.T.O. shaft is completly closed, there must be a gap of at least 4-5 cm to avoid collisions with the outer side (Pic. 6).

The working angle of the P.T.O. has to be the smallest possible; preferably it should not exceed 10° (Pic. 7), so has to make the P.T.O. shaft and the machine last longer.

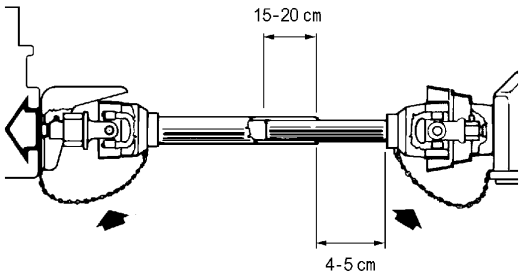

Picture 6

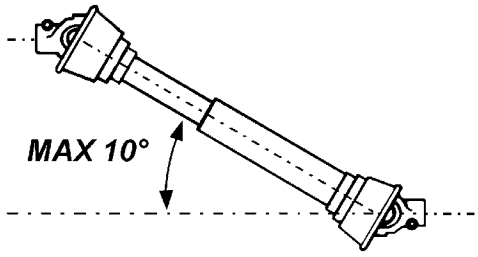

Picture 7

Via Balla, 55/57 – 35010 Villafranca Padovana (PD)
Tel. +39 049 9075684 – Fax +39 049 9075524

7 – Adjust the 3-point lifting mechanism of the tractor so that the working position of the spreader i horizontal (70-80 cm above the ground) see (Pic. 8).

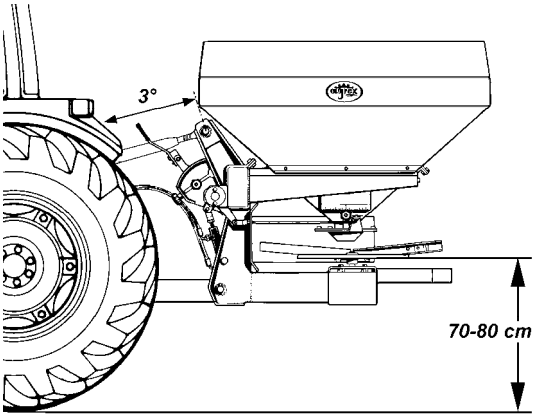

Picture 8

8 – Connect the hoses of the double-acting hydraulic couplings of the tractor (Pic. 8). In this way the shutters can be easily controlled from the driver's seat. Another aspect that the flow regulation on the hydraulic cylinder offers is that one varies the lever opening and closing speed.
Before connecting yhe hidraulic hoses or carry out any mantenance work on the hydraulic system, lower the spreader to the ground, tur the engine off and drop the pressure.

9- Connect the lights to the tractor

4.4 Preliminary cleaning

Once all connections have been made, the whole machine must be cleaned of dirt that has built up during transit, storage and handling.

Use suitable non-corrosive degreasing products and dry all machine parts - exposed metal and paintwork alike - using soft, dry cloths.

4.5 General inspection

WARNING

Before starting to use the machine, safety devices must be checked to ensure they are efficient and working perfectly.

To work in complete safety it is necessary to:

• Tighten the bolts and all locking devices.

• Make sure all safety guards are properly installed.

• Do not leave tools or other objects not belonging to the machine inside the hopper or on the mechanical parts.

AGREX S.p.A.
Via Balla, 55/57 – 35010 Villafranca Padovana (PD)
Tel. +39 049 9075684 – Fax +39 049 9075524

5 SECTION – Use

5.1 Prior to use

Before operating the machine, the operator must have read and understood all parts of this manual, especially those given in “Section 2” on Safety.

Check the machine’s conditions carefully, especially parts most subject to wear and tear.

5.2 Starting up

The machine must be operated exclusively by skilled personnel, who have been properly trained in the use of the machine and in the main safety procedures. Before starting the machine, personnel are required to make themselves familiar with its controls.

5.3 Adjustments

Warning

In order to avoid accidents and dangerous situations every machine adjustments has to be done exclusively with the machine switched off and the ignition keys have to be disconnected.
The adjustment should be done accordingly to this use and maintenance manual

The machine control is described in 2.2 Control Devices.

5.3.1 Product spreading adjustment

1- Release the adjusting lever by screwing out the ball cranck handle (**A**).

2- Set the lever at the spreader side in order to increase or decrease the quantity of product to be spread. If you pull the lever toward the tractor the quantity will increase whereas if you push it the quantity will decrease until the spreading is completely stopped.

3- Lock the adjusting lever by screwing the ball cranck handle.

Picture 9

Via Balla, 55/57 – 35010 Villafranca Padovana (PD)
Tel. +39 049 9075684 – Fax +39 049 9075524

5.3.2 Spreading width adjustment

1- Release the adjusting lever by screwing out the the ball cranck handle (**B**)

2- Increase or decrease the spreading width using the levers located in the fertilizer spreader rear. Pull the lever toward the centre of the machine to increase the width, push it to decrease it.

3- Lock the adjusting lever by screwing the ball cranck handle.

Product spreading adjustment lever.

Spreading width adjustment lever.

5.3.3 Spreading patterns

The fertilizer-spreader is equipped with 2 distinct hydraulic circuits that allow to control the fertilizer flow rate on the right and left spreading disc separately. This system allows to obtain three different spreading angles by operating the hydraulic controls of the tractor (Pic. 10):

- Spreading on 180 °
- Spreading on 90° on the right
- Spreading on 90° on the left

Single jack hydraulic control (optional)

It is possible to obtain three different spreading patterns by operating on the ball valves of the hydraulic sytem. (Pic. 10 and Pic. 11)

- 180º spreading width: **(C)** and **(D)** valves are open
- 90º right side spreading: (**D**) valve is closed; (**C**) valve is open
- 90° left side spreading: (**D**) valve is open; (**C**) valve is closed.

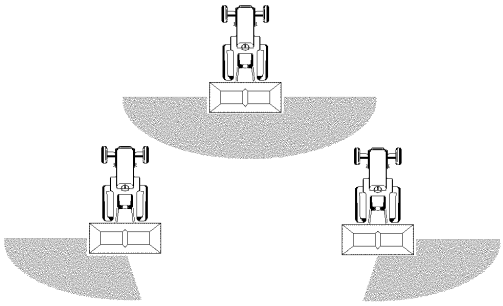

Picture 10

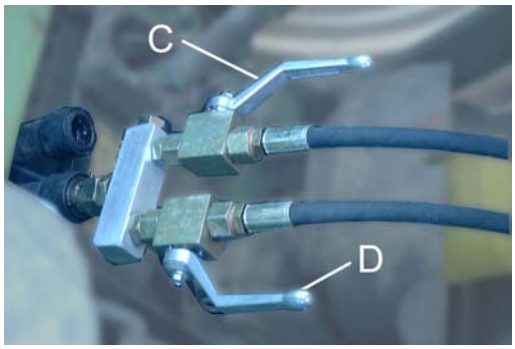

Picture 11

Via Balla, 55/57 – 35010 Villafranca Padovana (PD)
Tel. +39 049 9075684 – Fax +39 049 9075524

5.3.4 Adjusting the blades.

According to the different specific weights or the fertilizers, change the position of the spreading discs by fixing them in the stops 1-2-3-4-5 .

One of the two blades is equiped with a graduate sliding plate. The small stop on the sliding plate determines the setting position. The setting of the plate must be carried out only on particular occasions, as it is adjusted by the manufacturer before the delivery.

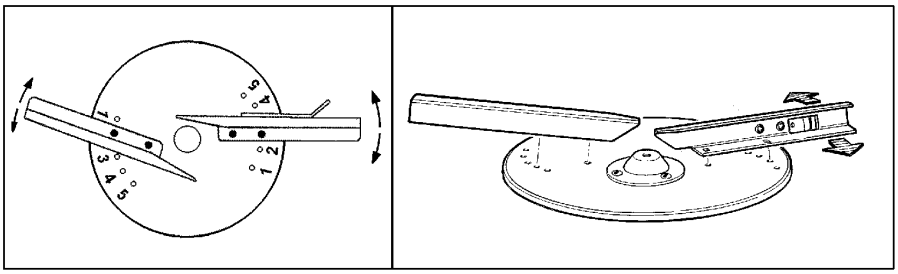

Picture 12

1. Press the disc and pull up the spreading vane.

2. Move the vane to the new position and ensure that the stopper is well placed

The type of paddle to be assembled on the spreading disk must be selected according to the spreading width being adopted.

In particular:

- Spreading widths of 12 and 18 m require "short" paddles to be assembled on the spreading disk (see fig. 13)
- Spreading widths of 24 m require "long" paddles to be assembled on the spreading disk (see fig. 14).

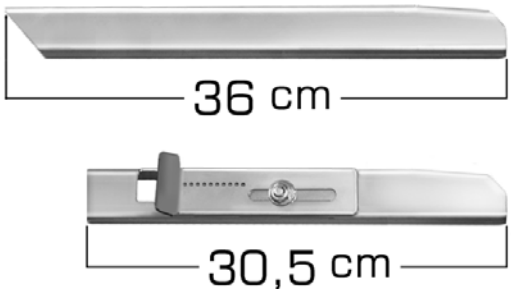

Picture 13. “Short" paddles

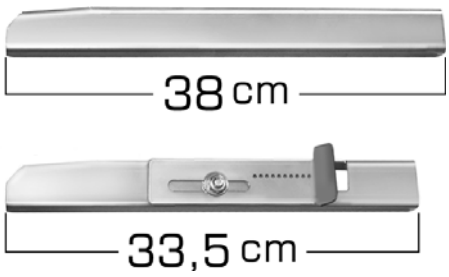

Picture 14. "Long" paddles

AGREX S.p.A.
Via Balla, 55/57 – 35010 Villafranca Padovana (PD)
Tel. +39 049 9075684 – Fax +39 049 9075524

5.3.5 Loading the machine's hopper

It is very important to check the stability of the fertilizer spreader after coupling to the tractor.

- Before loading the fertilizer spreader, follow the instructions provided in Appendix A to this manual in order to calculate the minimum front ballast to be applied to the tractor required to ensure the stability necessary after the tractor and fertilizer spreader have been coupled together.
- Lower the fertilizer spreader into loading position (until it touches the ground), switch off the tractor's engine, and set the parking brake in order to prevent any and all accidental movement.
- Stand on the loading platform for all fertilizer spreader loading operations.
- Fill the hopper to the required level, making sure to distribute the fertilizer homogeneously inside to a flat level on top.
- **Never load the hopper above its maximum acceptable loading level – See Table 1 Technical Data.**
- After completing loading operations, re-close the loading platform into transport position and fasten it to the machine using the respective fixing rod

Remember that the product to be spread must be clean, and that stones and scraps of metal can both create risk and irreparably damage the machine's moving parts.

5.3.5.1 Use of the loading platform

Models with 1500 capacity hopper is equipped with loading platforms in order to limit the loading height to 1250 mm.

1. Release the fixing rod.

2. Lower the loading platform completely.

3. Perform all loading operations from a balanced position on the loading platform.

4. After completing loading operations, re-close the loading platform and fasten it in place using the respective fixing rod.

Via Balla, 55/57 – 35010 Villafranca Padovana (PD)
Tel. +39 049 9075684 – Fax +39 049 9075524

5.3.6 Distribution

- Operate the tractor power take off.

- Set the tractor hydraulic system control in order to open (and close) the batching selvage.
Thanks to the stirrer moving, the product goes onto the spreading disc and, because of a centrifugal force, it will be cast outward by the spreading vanes.

5.3.7 Driving technique suggestions

The quality of spreading depends greatly on the operator's driving technique.

- During fertilizer spreading, maintain the speed indicated in the spreading tables as constantly as possible. Spreading the fertilizer at insufficient speed increases the concentration of the fertilizer spread on the soil, whereas excessive speed decreases such concentration.

- During spreading, adopt evenly-distanced spreading passages in order to maintain constant distance from all previous spreading passages.

- Stop spreading in the vicinity of the ends of the drills and during manoeuvres. In order to avoid spreading fertilizer outside the edges of the field, switch spreading back on again only after approaching the end of the field at a distance equal to the maximum rear spreading length (see the spreading tables).

- Grains of fertilizer are very lightweight and their trajectory of movement varies with the amount of wind. For this reason, stop spreading when wind speed is too high, otherwise the distribution of the fertilizer spread over the soil will be irregular.

5.3.8 Field-edge spreading

The deflector blade for the field's edge (see figure below) must be used for field-edge spreading.

AGREX S.p.A.
Via Balla, 55/57 – 35010 Villafranca Padovana (PD)
Tel. +39 049 9075684 – Fax +39 049 9075524

5.3.8.1 Adjustment

WARNING!

The power takeoff must be switched off during deflector blade adjustment operations.

Adjust the deflector blade as follows before proceeding to field-edge spreading:

1. Loosen the deflector blade's locking screws.

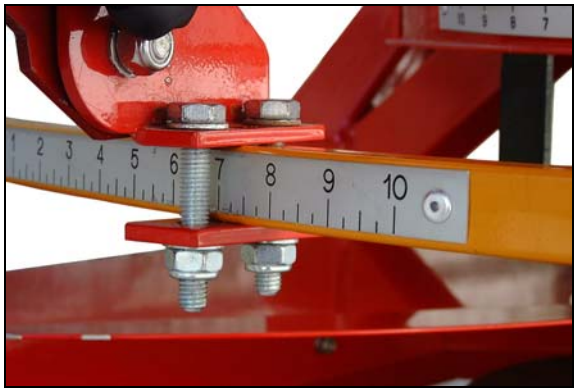

2. Consult the spreading tables and position the deflector blade in the position required (this position depends on the type of fertilizer and the spreading width being used).
Tighten the deflector blade's locking screws.

5.3.8.2 Field-edge spreading guide

During the field-edge spreading, maintain from the edge of the field, the distance indicated in the spreading tables.

5.3.9 Setting the flow rate (optional)

When using fertilizer with characteristics other than those indicated in the spreading tables, the flow rate must be set using the new type of fertilizer.

Proceed as follows:

DANGER

All these operations must be performed with the machine switched off.

Only the operations described in Points 13 and 14 can be performed with the machine switched on.

AGREX S.p.A.
Via Balla, 55/57 – 35010 Villafranca Padovana (PD)
Tel. +39 049 9075684 – Fax +39 049 9075524

1. While keeping the spreading disk held firmly in place, rotate the mixer shaft using an appropriate tool until the disk becomes completely unscrewed (rotating the shaft clockwise for the left disk and counterclockwise for the right disk).

2.

3.

4. Remove the spreading disk.

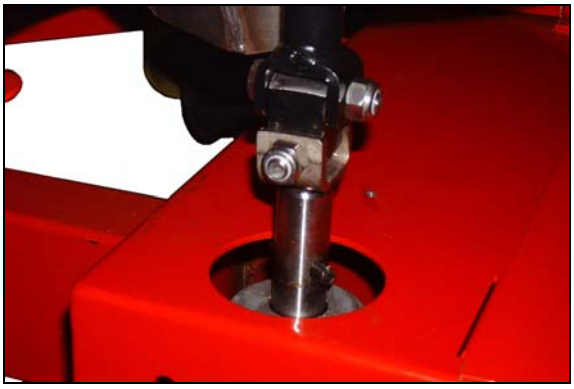

5. Screw the mixer shaft back onto the disk support pin.

Via Balla, 55/57 – 35010 Villafranca Padovana (PD)
Tel. +39 049 9075684 – Fax +39 049 9075524

6.

7. Position the deviator tube as shown in the figure.

8. Screw in the locking handwheel until the deviator tube is fastened to the protective case.

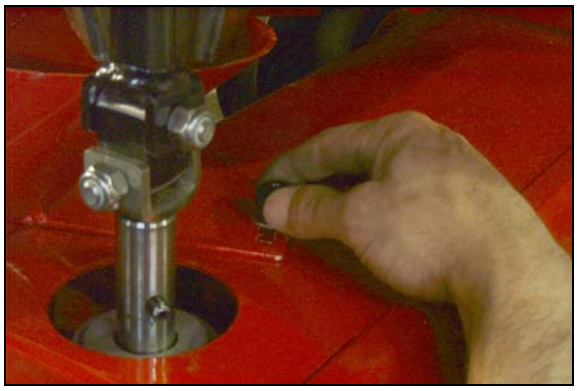

9.

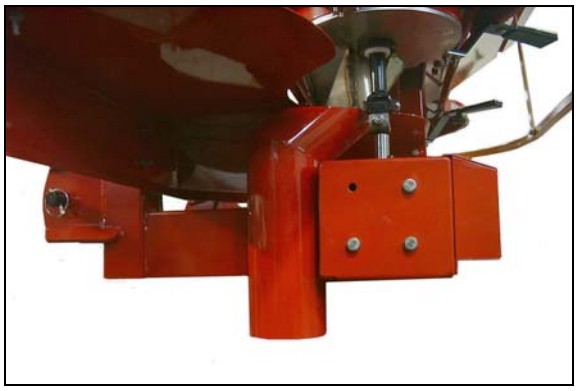

10. Position a container with at least 25 liter capacity beneath the deviator tube.

11. Adjust the hydraulic circuit ball valves as follows (consult the section entitled "Adjustable spreading" on Page 24):

- Spreading at 90° to the right, if the flow rate test is being made on the right mouth.
- Spreading at 90° to the left, if the flow rate test is being made on the left mouth.

Via Balla, 55/57 – 35010 Villafranca Padovana (PD)
Tel. +39 049 9075684 – Fax +39 049 9075524

12. Set the product adjustment lever in the position in which the flow rate must be measured.

13. Get on the tractor, switch on the engine and switch on the power takeoff.

14. Use the tractor's hydraulic control and open fertilizer delivery. Keep fertilizer delivery open for exactly 20 seconds (using a stopwatch, when possible). After 20 seconds, switch off fertilizer delivery, switch off the power takeoff and then switch off the tractor's engine.

15. Weigh the amount of fertilizer that has fallen into the container or multiply the volume (expressed in liters) of fertilizer collected by the specific weight of the fertilizer being used (in order to obtain the quantity of fertilizer collected expressed in kg).

16. Calculate the total flow rate of the fertilizer spreader in kg/minute by multiplying the quantity (in kg) collected in the container by 6.

$$Total\ flow\ rate = 6 \bullet Quantity\ of\ fertilizer\ collected\ (kg)$$

Oss. this method permits the calculation of the quantity of fertilizer delivered by the fertilizer spreader under normal spreading conditions (with both fertilizer dropping mouths open).

17. Repeat the operations above from Point 3 onwards in order to measure the flow rate in the other positions in which the product adjustment lever can be set.

After completing these measurement operations, switch off the tractor and re-position the spreading disk by repeating the operations above in inverse order.

5.3.10 How to calculate the quantity to be spread in kg/hectare

After learning the flow rate of the fertilizer leaving the fertilizer spreader, apply the formula below to calculate the necessary quantity expressed in kg/hectare:

$$Quantity\ of\ fertilizer\ (kg/ha) = 600 \cdot \frac{Total\ fertilizer\ flow\ (kg/min)}{Spreading\ with\ (m) \cdot advance\ speed\ (km/h)}$$

where:

- Total fertilizer spreader flow: this is the value obtained during flow rate testing.
- Spreading width: this is the intended width with which the fertilizer will be spread.
- Advance speed: this is the tractor's advance speed during fertilizer spreading.

Via Balla, 55/57 – 35010 Villafranca Padovana (PD)
Tel. +39 049 9075684 – Fax +39 049 9075524

5.3.11 Late top-spreading

For the late top spreading must be tilt the spreader.

Proceed as follows to adjust the spreader:

1. Consult the spreading tables and adjust the 3-point lifting mechanism of the tractor for set the spreader tilt.
2. Read the spirit-level for verify the spreader tilt.

Spirit-level

5.3.12 Discharging the hopper

Proceed as follows in order to discharge any fertilizer remaining inside the hopper after spreading:

1. After first checking the graduated horizontal level indicator, adjust the length of the attachment arm of the third power origin point in such way that fertilizer spreader is inclined in the direction of its rear end by around -6°.
   Important! During this operation, continuously check to make sure that the adjustment screw does not become completely unthreaded and DO NOT proceed further whenever the screw appears likely to become completely unscrewed.
2. Position a collection container beneath the spreading disks at the rear of the fertilizer spreader.
3. Use the tractor's hydraulic control to open fertilizer delivery.

After hopper discharging operations have been concluded, re-adjust the length of the attachment arm of the third power origin point in order to return the fertilizer spreader in horizontal position.

Via Balla, 55/57 – 35010 Villafranca Padovana (PD)
Tel. +39 049 9075684 – Fax +39 049 9075524

6 SECTION – Maintenance

6.1 Routine maintenance

DANGER

BEFORE CARRYING OUT ANY MAINTENANCE WORK ON THE MACHINE, DETACH THE TOWING VEHICLE AND DISENGAGE THE SPREADER DISC TRANSMISSION BY MEANS OF THE LEVER PROVIDED.

ALWAYS SWITCH OFF THE TRACTOR'S ENGINE BEFORE PROCEEDING TO MAINTENANCE.

The various maintenance operations are described below.

The time intervals given refer to normal operating conditions; consequently, if the machine is subjected to particularly heavy duty, they must be reduced accordingly.

The purpose of these instructions is to assure efficiency, reduce wear and generally make the machine last longer: the user has everything to gain from keeping the machine in pristine condition.

6.1.1 Daily cleaning

After each day's work, the machine must be cleaned thoroughly, removing any waste and/or residues left behind after processing, or other damp or dusty materials.

6.1.2 General checks

The vibrations produced during work and movement of the equipment from one place to another may in the long term cause loosening of the bolts. You are advised to check the nuts and bolts roughly every 50 working hours.

Grease the PTO shaft cross every 10 hours and check the tension of the belts that drive the spreading discs.

The lubrication of the transmission group must be checked every 500 hours.

6.1.4 Spreading paddle assembly/disassembly

WARNING

Before proceeding to the assembly/disassembly of the fertilizer spreader paddles, switch off the tractor's engine and set the parking brake.

1. Loosen the screws that fasten the spreader paddle to the fertilizer spreader disk.
2. Replace the old fertilizer spreader paddles with new ones and re-tighten the fixing screws.

Warning! The fertilizer spreader's paddles must be assembled in the correct disk rotation direction.

Via Balla, 55/57 – 35010 Villafranca Padovana (PD)
Tel. +39 049 9075684 – Fax +39 049 9075524

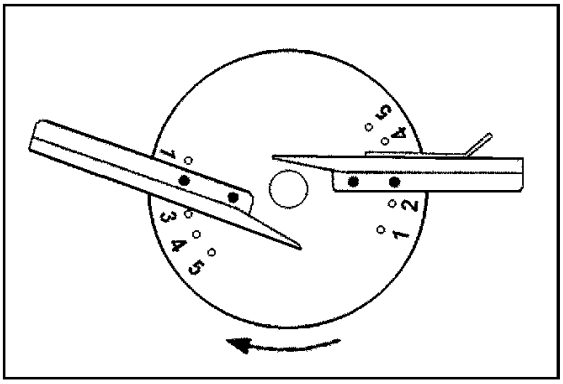

Correctly assembled paddles

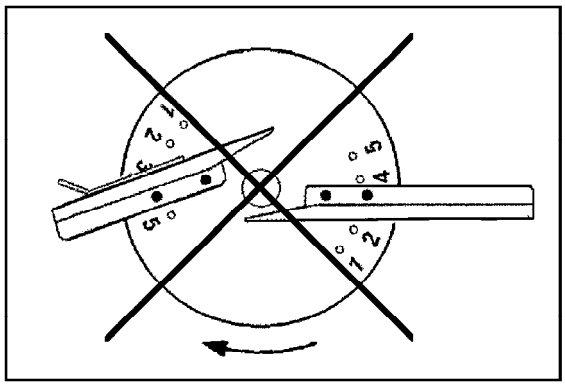

Incorrectly assembled paddles

6.2 Extra maintenance

It is essential to conduct a general inspection of the machine's mechanical parts at regular intervals.
In particular, it is necessary to check the usury of the vanes.

6.3 To keep in mothball

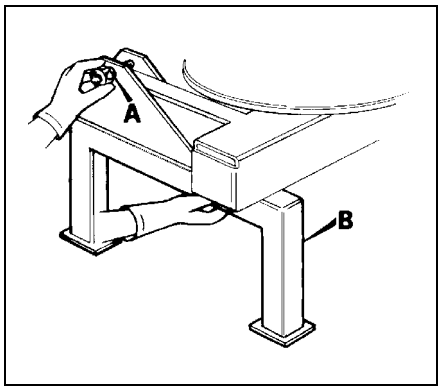

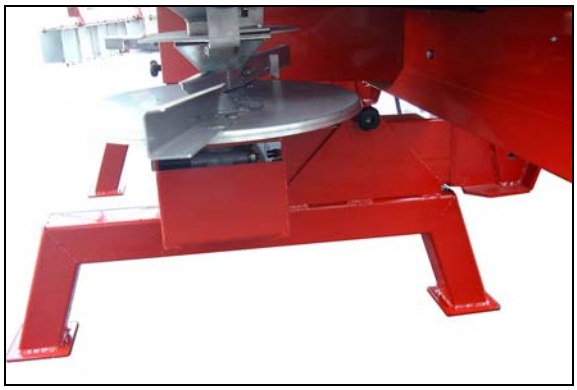

PARK THE FERTILIZER SPREADER ONLY WITH THE HOPPER EMPTY AND ONLY ON SOLID, LEVEL GROUND. ALWAYS USE THE SUPPORT FEET PROVIDED.

If the machine is not employed for a long time it is necessary to check its mechanical and electrical parts, so that to avoid problems when bringing it into use again.

All parts subjected to wear must be carefully controlled. The worn out and damaged parts should be immediately replaced by original spare parts provided by the distributor or the producer.

Besides, check that the bolts of the machine are not shaked loose during the working.

Such instructions are meant to maintain the machine in good conditions, riducing its wear and tear and prolonging its life.
Uncouple the fertilizer spreader from the tractor by undoing the operations indicated in Section 4.2 (Coupling to the tractor).

Via Balla, 55/57 – 35010 Villafranca Padovana (PD)
Tel. +39 049 9075684 – Fax +39 049 9075524

After the fertilizer spreader has been uncoupled, couple the cardan shaft to the respective support (see the respective figure) in order to avoid damaging the protections provided for the cardan shaft itself.

In the same way, fasten the hydraulic distributor to its own support (see the respective figure).

6.4 Re-start

WARNING

Before putting the machine back into service, it is always a good idea to check its general conditions: its current state will depend on the conditions it was mothballed in.

6.5 Dismantling the machine

Should the decision be made to dismantle the machine, its components must be sorted into groups of like materials and disposed of individually in accordance with the local laws in force on disposal of special waste.

WARNING

WHEN DISPOSING OF THE VARIOUS COMPONENTS, ONLY GO THROUGH A LEGALLY AUTHORIZED FIRM THAT WILL ISSUE A RECEIPT ATTESTING TO DISPOSAL.

Via Balla, 55/57 – 35010 Villafranca Padovana (PD)
Tel. +39 049 9075684 – Fax +39 049 9075524

7 SECTION – Spare parts

7.1 Spare parts

All the spare parts can be ordered from the manufacturer, quoting:

- machine model

- machine's serial number

- year of manufacture

- reference code of the part (to be found in the spare parts catalogue);

- means of transport: if no preference is specified, the manufacturer shall do its best to ensure you receive good service, though it declines all responsibility for any delays in shipment as a result of force majeure.

Lastly, remember you can always contact the manufacturer for your servicing.

XPL

☐ **XPL** 800
☐ **XPL** 1000
☐ **XPL** 1200
☐ **XPL** 1500

AGG. 05.2010 - REV. 00

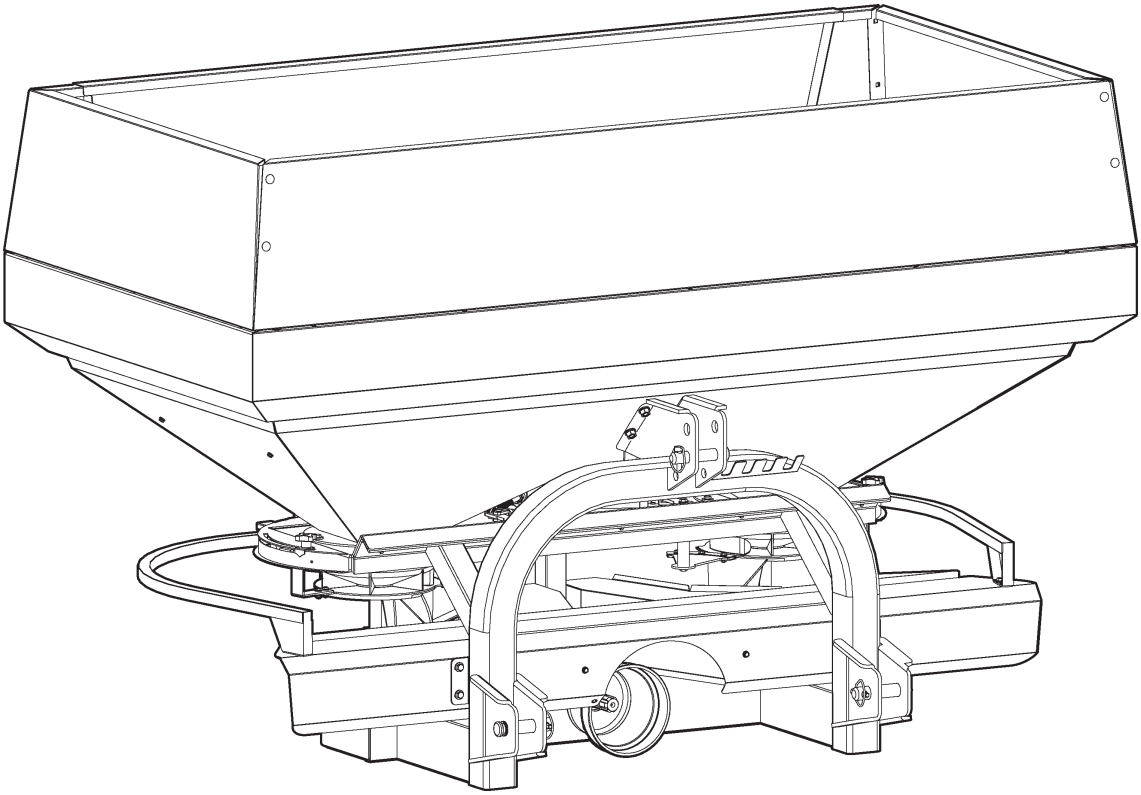

agrex

CATALOGO RICAMBI
SPARE PARTS

Cod. MENNXPLCECR03
Agg. 20110426
Rev. 03

FRAME
TELAIO BASE

XPL 800	XPL 1200
XPL 1000	XPL 1500

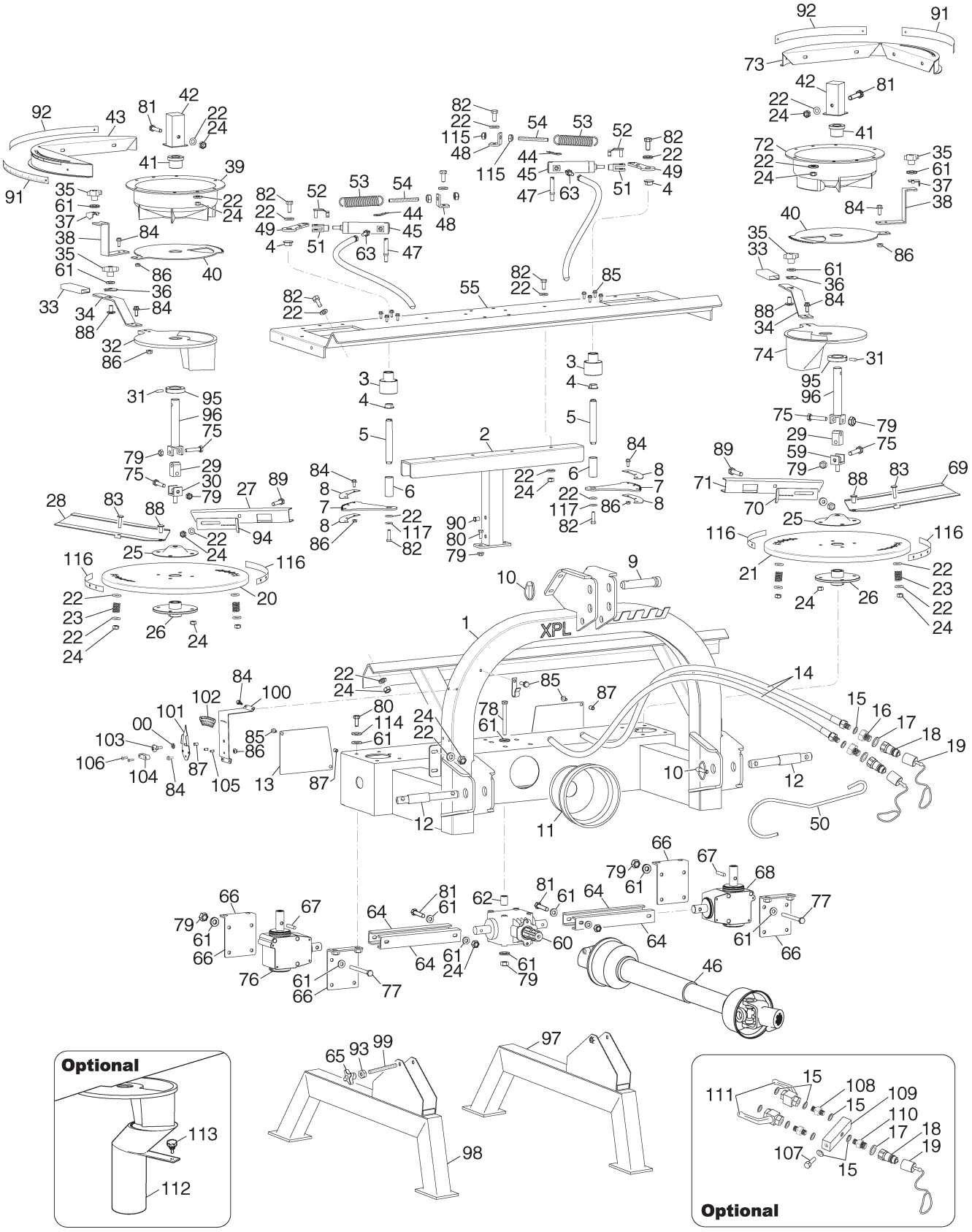

REF.	CODE	Q.TY	DESCRIZIONE	DESCRIPTION
1	L080100F	1	TELAIO XPL	FRAME MOD. XPL
2	L080600	1	SOSTEGNO	SUPPORT
3	L082700	2	BUSSOLA GUIDA	BUSH GUIDE
4	B2023115	4	BOCCOLA AUTOLUBRIFICANTE 20X23X11.5	SELF-LUBRICATING BUSH 20X23X11.5
5	L082600	2	ALBERO APERTURA	OPENING SHAFT
6	L087200	2	DISTANZIALE INFERIORE ALBERO APERTURA	SPACER
7	L082300I	2	LEVA DENTATA APERTURA	LEVER OPENING
8	L082400I	4	LAMIERA GUIDA	GUIDE
9	08.40.00	1	PERNO 3° PUNTO Ø=25	3RD POINT PIN Ø=25
10	80201063	3	SPINA PER INTERNI Ø=10X63	PIN Ø=10X63
11	PTOCUFFIA	1	CONTROCUFFIA P.T.O	PTO GUARD
12	30210004	2	PERNO DOPPIO CAT.1-2	FIXING PIN D.12 L.70
13	L087500A	2	CARTER POSTERIORE TRAVERSA	GUARD
14	30013250	2	TUBO OLIO 1/4" L.1700 1/4"M 1/4"F	OIL DUCT
15	659314R0	2	RONDELLA RAME 1/4".	COPPER WASHER 1/4".
16	30055110	2	TAPPO RIDUZIONE M 1/2" F 1/4"	FITTING M 1/2" F 1/4"
17	30015026	2	RONDELLA RAME Ø=1/2"	COPPER WASHER Ø=1/2"
18	30055007	2	INNESTO R/MASCHIO F1/2".	COUPLING F1/2".
19	300155001	2	TAPPO PVC FEMMINA X INNESTO RAPIDO M 1/2	PLUG
20	121200	1	DISCO DISTRIBUZIONE DX DOPPIO DISCO	RIGHT SPREADING DISC
21	121300	1	DISCO DISTRIBUZIONE SX DOPPIO DISCO	LEFT SPREADING DISC
22	659208IN	88	RONDELLA INOX PIANA M8	PLAIN WASHER M8 (STAINLESS STEEL)
23	30070007I	4	MOLLA A COMPRESSIONE L=22.5 DM=12.5	COMPRESSION SPRING L=28
24	747408IN	44	DADO INOX AUTOBL. MEDIO M8	SELF-LOCKING NUT M8-A2 (S.S.)
25	081500I	2	FLANGIA	FLANGE
26	08.20.00	2	FLANGIA DISCO DISTRIBUTORE	LOWER FLANGE
27	120504	1	ALETTA DX L.305	RIGHT VANE L.305
27	120604	1	ALETTA DX L.335	RIGHT VANE L.335
28	120502	1	ALETTA DX L.360 37°	RIGHT VANE L.360 37°
28	120602	1	ALETTA DX L.380 37°	RIGHT VANE L.380 37°
29	L081300	2	QUADRO TRAINO	FIXING BLOCK
30	081500B	1	FORCELLA DI TRAINO DX	PULL FORK BLADE RIGHT
31	59280810I	2	VITE STEI P.CONICA M8X10 INOX	DOWEL M8X10 ZN
32	L082100AD	1	TRAMOGGIA CADUTA DX, XPL	HOPPER LEFT
33	IMGO1030	2	IMPUGNATURA GOMMA 10X30	RUBBER HANDLE 10X30
34	L081800I	2	LEVA SPOSTAMENTO CADUTA	LEVER OF REGULATION
35	VB500013	4	VOLANTINO A CROCE M8	HANDWHEEL M8
36	L082000I	2	INDICATORE DI CADUTA	INDICATOR
37	L081900I	2	INDICATORE DI QUANTITÀ	QUANTITY INDICATOR
38	L081700I	2	LEVA FERMO APERTURA	ADJUSTMENT LEVER
39	L081100AD	1	TRAMOGGIA INFERIORE DX- XPL	LOWER HOPPER LEFT
40	L082200A	2	SERRANDA REGOLAZIONE QUANTITÀ	FEEDING GATE REGULATION QUANTITY
41	L081400	2	BUSSOLA GUIDA AGITATORE	AGITATOR BUSH GUIDE
42	L083200C	2	AGITATORE STANDARD	AGITATOR
43	L081600D	1	SOSTEGNO REGOLAZIONI DX	SUPPORT REGULATIONS RIGHT
44	80100250	2	SPINA A R D.2 L.50	COTTER PIN A R D.2 L.50
45	L083000	2	MONTAGGIO PISTONE	MOUNTING PISTON
46	C2200000	1	ALBERO CARDANO 12X900 - NORME CE	PTO SHAFT 12X900 - EC STANDARD
47	L082800	2	PERNO FISSAGGIO CILINDRO	FIXING PIN
48	L084000	2	ANGOLARE FISSAGGIO TIRANTE	ANGULAR FIXING CONNECTING ROD
49	L082500	2	LEVA ATTACCO PISTONE	LEVER ATTACK PISTON
50	30028004	1	SUPPORTO ALBERO CARDANICO	PTO SHAFT SUPPORT
51	33665000	2	FORCELLA PER TIRANTE M10X42	FORK FOR CONNECTING ROD M10X42
52	33691042	2	CLIP FERMO FORCELLA 10X42	CLIP 10X42
53	F301012I	2	MOLLA A TRAZIONE INOX	TENSION SPRING INOX
54	L084100	2	FILETTO TIRANTE	TIE ROD
55	L080200	1	LAMIERA SOSTEGNO TRAMOGGIA	HOPPER PLATE
59	081500C	1	FORCELLA DI TRAINO SX	PULL FORK BLADE LEFT
60	08.05.00.A	1	GRUPPO TRASMISSIONE CENTRALE	CENTRAL GEAR-BOX
61	659210IN	28	RONDELLA INOX PIANA M10	PLAIN WASHER M10 (STAINLESS STEEL)
62	L088300	4	BUSSOLA L.28	BUSH L.28

REF.	CODE	Q.TY	DESCRIZIONE	DESCRIPTION
63	30055112	2	NIPPLE OLIO M/M 1/4"-1/4" FORO 1 MM	OIL NIPPLE M/M 1/4"-1/4"
64	L088700	4	PIASTRINA DI UNIONE GRUPPI	CONNECTION PLATE GROUPS
65	VB400010	2	VOLANTINO 4 LOBI M10 PASSANTE	HANDWHEEL WITH 4 LOBES M10
66	L089900	4	PIASTRA FISSAGGIO GRUPPI	FIXING PLATE GROUPS
67	68730840	2	SPINA ELASTICA Ø=8X40	ELASTIC PIN Ø=8X40
68	08.06.02.A	1	GRUPPO TRASMISSIONE LATERALE	SIDE GEAR-BOX
69	120501	1	ALETTA SX L.360 37°	LEFT VANE L.360 37°
69	120601	1	ALETTA SX L.380 37°	LEFT VANE L.380 37°
70	088500I	1	SPORTELLO	DOOR
71	120503	1	ALETTA SX L.305	LEFT VANE L.305
71	120603	1	ALETTA SX L.335	LEFT VANE L.335
72	L081100AS	1	TRAMOGGIA INFERIORE SX- XPL	LOWER HOPPER LEFT
73	L081600	1	SOSTEGNO REGOLAZIONI SX	SUPPORT REGULATIONS LF
74	L082100AS	1	TRAMOGGIA CADUTA SX, XPL	HOPPER LEFT
75	57371050I	4	VITE INOX TEPF M10X50 UNI 5737	SCREW TEPF M10X50 (STAINLESS STEEL)
76	08.06.02	1	GRUPPO TRASMISSIONE LATERALE	SIDE GEAR-BOX
77	57371020I	6	VITE INOX TEPF M10X120 UNI 5737	SCREW TEPF M10X120 STAINLESS STEEL
78	57371015I	4	VITE INOX TEPF M10X150 UNI 5737	SCREW TEIF M10X150 (S.S.) UNI 5737
79	747410IN	10	DADO INOX AUTOBLOCCANTE MEDIO M10	NUT SELF-LOCKING M10 S. STEEL
80	57391025I	12	VITE INOX TEIF M10X25 UNI 5739	SCREW TEIF M10X25 (S.S.) UNI 5739
81	57370850I	6	VITE INOX TEPF M8X50 UNI 5737	SCREW TEPF M10X50 (STAINLESS STEEL)
82	57390825I	44	VITE INOX TEIF M8X25 UNI 5739	SCREW M8X25 STAINLESS STEEL
83	57320840I	4	VITE INOX T-TONDA M8X40	BOLT TBQST M8X45 INOX
84	57400620I	10	VITE INOX F/ROND. M6X20	SCREW F/ROND. M6X20 STAINLESS STEEL
85	57400616I	12	VITE INOX F/ROND. M6X16	SCREW F/ROND. M6X16 (STAINLESS STEEL)
86	559006IN	16	DADO INOX ES. C/RON. ZIG. M6	NUT M6 (STAINLESS STEEL)
87	34206030I	4	INSERTO FILETTATO M6X13-INOX	GALVANIZED THREADED INSERT M6X13-ZN
88	57320820I	8	VITE INOX T-TONDA M8X20 UNI 5732	SCREW M8X20 (STAINLESS STEEL)
89	57320816I	4	VITE INOX T-TONDA M8X16 UNI 5732	SCREW T M8X16 (STAINLESS STEEL)
90	34208030I	8	INSERTO FILETTATO M8X16 INOX	NUTSERT M8X16 INOX
91	L084300	2	TARGHETTA REGOLAZIONE QUANTITA'	PLATE REGULATION QUANTITY
92	L084400A	2	TARGHETTA SPOSTAMENTO CADUTA	SHIFT INDICATOR PLATE
93	558810IN	2	DADO INOX ES. MEDIO PG M10 A2	NUT M10 A2 (STAINLESS STEEL)
94	088400I	1	SPORTELLO	DOOR
95	L081500	2	GHIERA DI FISSAGGIO	FIXING LOCK NUT
96	L081200	2	ALBERO AGITATORE	AGITATOR SHAFT
97	200300A	1	PIEDE DI SOSTEGNO SX	LEFT STAND
98	200400A	1	PIEDE DI SOSTEGNO DX	RIGHT STAND
99	20.03.06	2	BARRA M10 L.105 CAVALLETTO	THREADED ROD M10 L.105
100	L086402	1	SUPPORTO REGOLAZIONE INCLINAZIONE	INCLINATION REGULATOR SUPPORT
101	L086403	1	PARTICOLARE INCLINAZIONE	INCLINATION INDICATOR
102	L086404	1	ADESIVO INCLINAZIONE	GRADUATED ADHESIVE
103	62232000	1	VOLANTINO M6X16 MOD.VC.192/30P	HANDWHEEL M6X16 MOD. VC. 192/30P
104	LIVE0002	1	FIALA PER LIVELLE A BOLLA	AMPOULE FOR BUBBLE LEVEL
105	34200512	1	INSERTO FILETTATO M5X12-ZN	THREAD INSERT M5X12-ZN
106	73800512	2	VITE TBEI M5X12 ZN	SCREW TBEI M5X12 ZN
107	30055018	1	TAPPO T.E. 1/4".MASCHIO	PLUG T.E. 1/4".MASCHIO
108	30055029	2	NIPPLE OLIO M/M 1/4"-1/4"	OIL NIPPLE M/M 1/4"-1/4"
109	L084500	1	QUADRO UNIONE TUBI	PIPE CONNECTION PANEL
110	30055033	1	NIPPLE OLIO M/M 1/4"-1/2"	NIPPLE OIL M/M 1/4"-1/2"
111	30054100	2	RUBINETTO A SFERA F/F 1/4" 1/4"	FAUCET F/F 1/4" 1/4"
112	L087300	1	TUBO DI SCARICO	DESCHARGE TUBE
113	VB408150	1	VOLANTINO 4 LOBI M8×20	HANDWHEEL WITH 4 LOBES M8×20
114	679810IN	8	RONDELLA INOX D.E.V. M10	WASHER D.E.V. M10 (STAINLESS STEEL)
115	558810IN	4	DADO INOX ES. MEDIO PG M10 A2	NUT M10 A2 (STAINLESS STEEL)
116	L087400	4	TARGHETTA POSIZIONE PALETTE	VANES POSITION PLATE
117	679808IN	4	RONDELLA INOX D.E.V. M8	WASHER D.E.V. M8 (STAINLESS STEEL)

ATTENTION !

**THE USE
OF ORIGINAL PARTS TO
ENSURE THE CORRECT
FUNCTIONING
OF THE MACHINE.**

ATTENZIONE !

**PER UN CORRETTO
FUNZIONAMENTO DELLE
NOSTRE MACCHINE USARE
ESCLUSIVAMENTE RICAMBI
ORIGINALI**

LOADING HOPPER
TRAMOGGIA DI CARICO

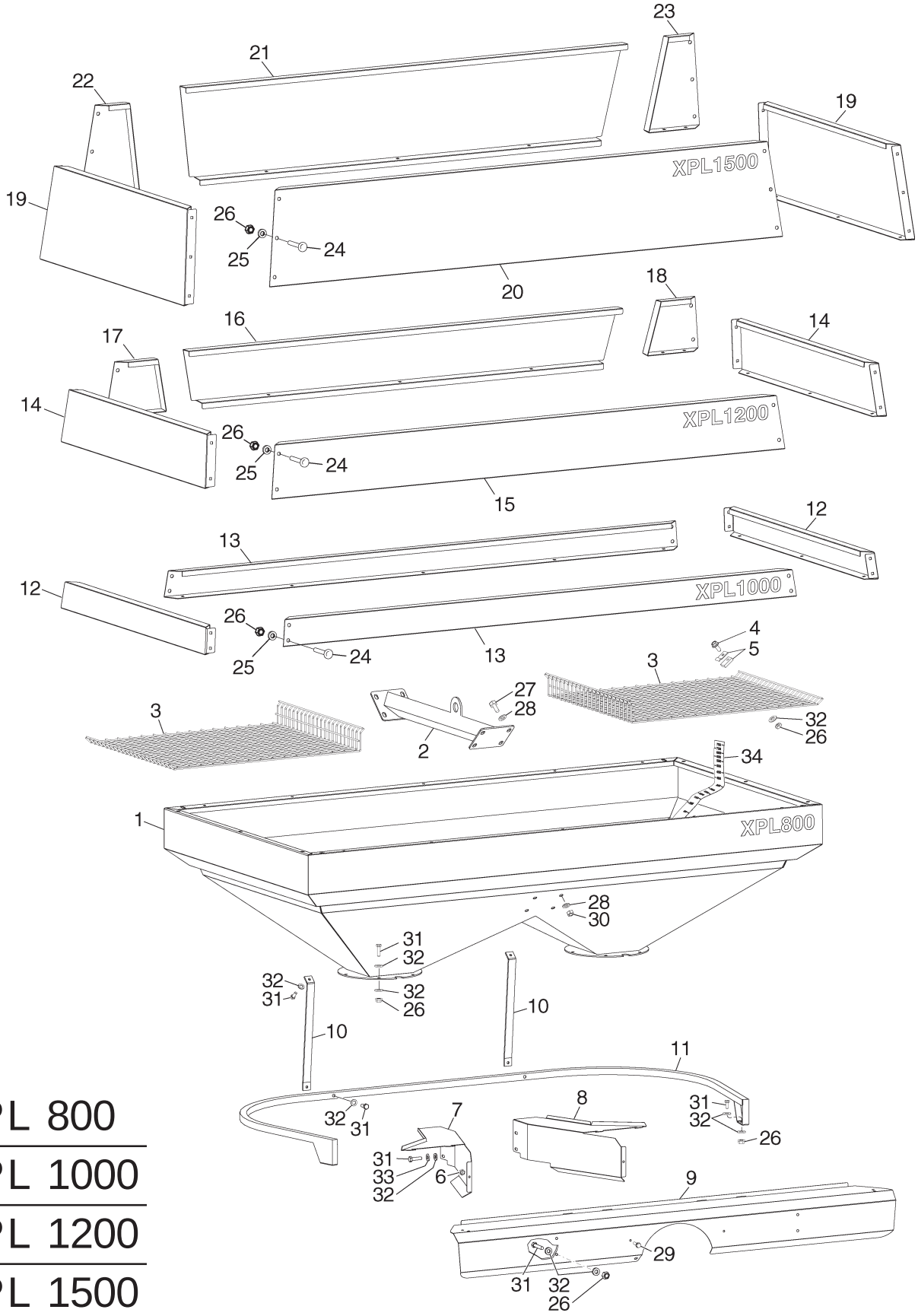

XPL 800

XPL 1000

XPL 1200

XPL 1500

REF.	CODE	Q.TY	DESCRIZIONE	DESCRIPTION
1	L080300A	1	TRAMOGGIA	HOPPER
2	L080400B	1	TRAVERSO	CROSSPIECE
3	L083400B	2	GRIGLIA PROTEZIONE XPL	PROTECTIVE GRID
4	57390830I	8	VITE INOX TEIF M8X30 UNI 5739	SCREW TEIF M8X30 (S.S.) UNI 5739
5	40015026	8	BLOCCHETTO FERMARETE FILO D.5 MM	MESH CLAMP
6	559006IN	8	DADO INOX ES. C/RON. ZIG. M6	NUT M6 (STAINLESS STEEL)
7	L089600C	1	PARTICOLARE CARTER DX	GUARD RIGHT
8	L089600B	1	PARTICOLARE CARTER SX	GUARD LEFT
9	L089700A	2	CARTER ANTERIORE	GUARD
10	L083700	2	SOSTEGNO PROTEZIONE	SAFETY-DEVICE SUPPORT
11	L083600	1	PROTEZIONE DISCHI	DOSING DISC PROTECTION
12	L084602	2	RIALZO TRAMOGGIA XPL1000	HOPPER EXTENSION XPL1000
13	L084601	2	RIALZO ANTERIORE E POSTERIORE	FRONT AND REAR EXTENSION
14	L084701	2	RIALZO TRAMOGGIA XPL1200	HOPPER EXTENSION XPL1200
15	L084702	1	FIANCO RIALZO ANTERIORE XPL1200	RIGHT REAR BOARD XPL1200
16	L084705	1	SPONDA POSTERIORE MOBILE XPL1200	MOBILE REAR EXTENSION XPL1200
17	L084703	1	SPONDINA POSTERIORE DX	RIGHT REAR EXTENSION
18	L084704	1	SPONDINA POSTERIORE SX	LEFT REAR EXTENSION
19	L086201	2	RIALZO TRAMOGGIA XPL1500	HOPPER EXTENSION XPL1500
20	L086202	1	FIANCO RIALZO ANTERIORE XPL1500	RIGHT REAR BOARD XPL1500
21	L086205	1	SPONDA POSTERIORE MOBILE XPL1500	MOBILE REAR EXTENSION XPL1500
22	L086203	1	SPONDINA POSTERIORE DX	RIGHT REAR EXTENSION
23	L086204	1	SPONDINA POSTERIORE SX	LEFT REAR EXTENSION
24	57320816I	28	VITE INOX T-TONDA M8X16 UNI 5732	SCREW T M8X16 (STAINLESS STEEL)
25	659210IN	28	RONDELLA INOX PIANA M10	PLAIN WASHER M10 (STAINLESS STEEL)
26	747408IN	36	DADO INOX AUTOBL. MEDIO M8	SELF-LOCKING NUT M8-A2 (S.S.)
27	57391240I	8	VITE INOX M12X40 UNI 5739	SCREW M12X40 (STAINLESS STEEL)
28	659212IN	16	RONDELLA INOX PIANA M12	PLAIN WASHER M12 (STAINLESS STEEL)
29	57400616I	2	VITE INOX F/ROND. M6X16	SCREW F/ROND. M6X16 (STAINLESS STEEL)
30	747412IN	8	DADO INOX AUTOBL. MEDIO M12	SELF-LOCKING NUT M12 (S.S.)
31	57390825I	24	VITE INOX TEIF M8X25 UNI 5739	SCREW M8X25 STAINLESS STEEL
32	659208IN	44	RONDELLA INOX PIANA M8	PLAIN WASHER M8 (STAINLESS STEEL)
33	679808IN	4	RONDELLA INOX D.E.V. M8	WASHER D.E.V. M8 (STAINLESS STEEL)
34	L086100	1	ADESIVO GRADUATO CAPACITÀ XPL	XPL CAPACITY GRADUATED LABEL

MOBILE DEFLECTOR

LIMITATORE MOBILE PER BORDURE

XPL 800

XPL 1000

XPL 1200

XPL 1500

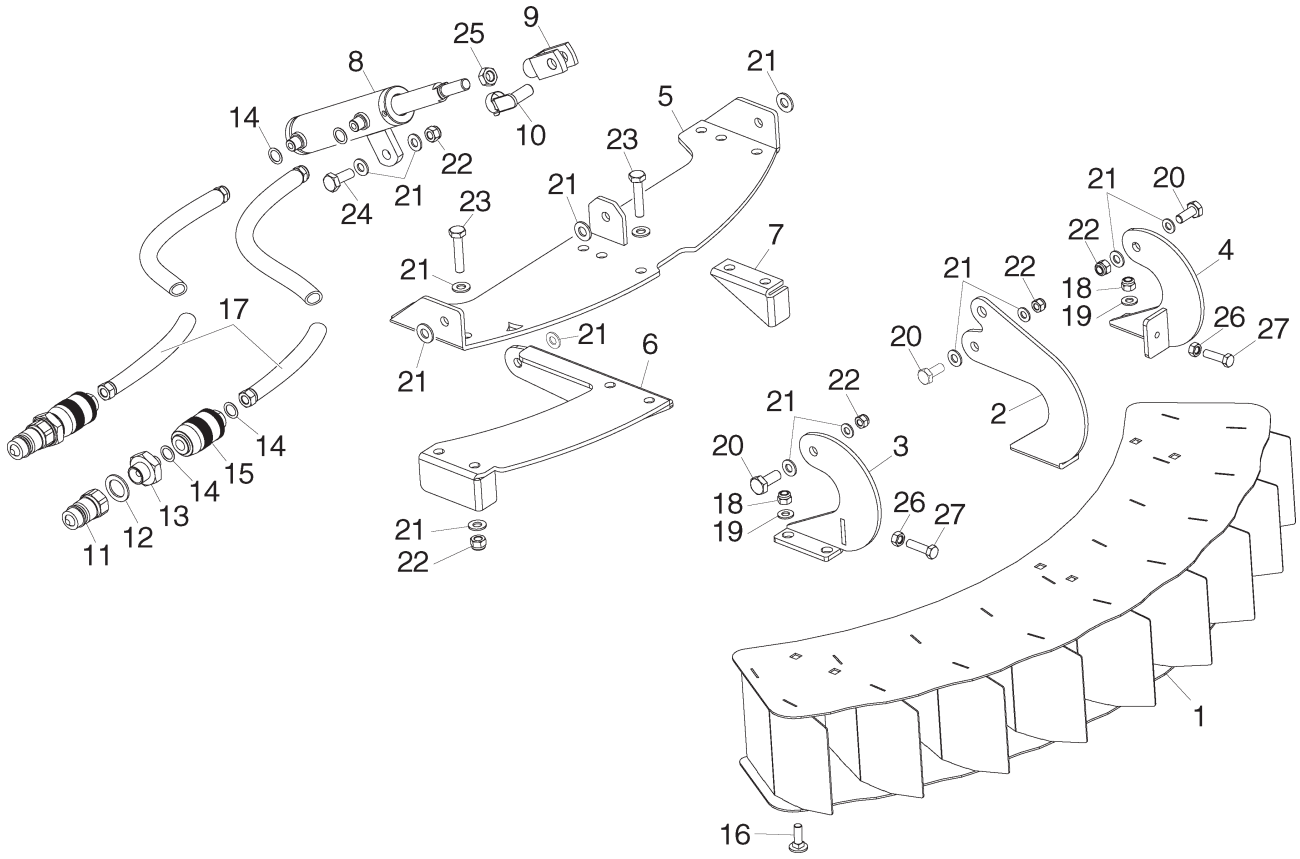

REF.	CODE	Q.TY	DESCRIZIONE	DESCRIPTION
1	DF8004600	1	DEFLETTORE FISSO	FIXED DEFLECTOR
2	DF8004100	1	PARTICOLARE CERNIERA MOBILE	MOBILE HINGE DETAIL
3	DF8003900	1	SOSTEGNO SX DEFLETTORE IDR.	HYDRAULIC DEFLECTOR LEFT SUPPORT
4	DF8004000	1	SOSTEGNO DX DEFLETTORE IDR.	HYDRAULIC DEFLECTOR RIGHT SUPPORT
5	DF4000100	1	PIASTRA DEFLETTORE	DEFLECTOR PLATE
6	DF8003600	1	FISSAGGIO INF. DEFLETTORE	DEFLECTOR LOWER FIXING
7	DF8004200	1	FISSAGGIO DEFLETTORE IDRAULICO	HYDRAULIC DEFLECTOR FIXING
8	087800	1	CILINDRO DEFLETTORE XPL XPI	XPL XPI DEFLECTOR CYLINDER
9	167612ZN	1	FORCELLA FORO FIL.M12 ZN UNI1676	FORK FIL.M12 ZN UNI1676 ART. 33665
10	1676S12Z	1	SERRAGGIO AUTOMATICO M12 ZN	AUTOMATIC CLAMP M12 ZN
11	30055007	2	INNESTO R/MASCHIO F1/2".	COUPLING F1/2".
12	30015026	2	RONDELLA RAME Ø=1/2"	COPPER WASHER Ø=1/2"
13	30055033	2	NIPPLE OLIO M/M 1/4"-1/2"	NIPPLE OIL M/M 1/4"-1/2"
14	659314R0	6	RONDELLA RAME 1/4".	COPPER WASHER 1/4".
15	30054051	2	REGOLATORE DI FLUSSO A PIGNA 1/4''	FLOW ADJUSTER 1/4''
16	57320825I	6	VITE INOX T-TONDA M8X25	SCREW T M8X25 (STAINLESS STEEL)
17	30013266	2	TUBO OLIO DEFLETTORE IDRAULICO	HYDRAULIC DEFLECTOR OIL PIPE
18	747408IN	6	DADO INOX AUTOBL. MEDIO M8	SELF-LOCKING NUT M8-A2 (S.S.)
19	659208IN	6	RONDELLA INOX PIANA M8	PLAIN WASHER M8 (STAINLESS STEEL)
20	57391030I	3	VITE INOX TEIF M10X30 UNI 5739	SCREW TEIF M10X30 (S.S.) UNI 5739
21	659210IN	20	RONDELLA INOX PIANA M10	PLAIN WASHER M10 (STAINLESS STEEL)
22	747410IN	10	DADO INOX AUTOBLOCCANTE MEDIO M10	NUT SELF-LOCKING M10 S. STEEL
23	57371060I	6	VITE INOX TEPF M10X60 UNI 5737	SCREW TEPF M10X60 (S.S.) UNI 5737
24	57391035I	1	VITE INOX TEIF M10X35 UNI 5739	SCREW TEIF M10X35 (S.S.) UNI 5739
25	558812IN	1	DADO INOX ES. MEDIO M12	NUT M12 (STAINLESS STEEL)
26	558808IN	2	DADO INOX ESAGONALE MEDIO M8	NUT M8 (STAINLESS STEEL)
27	57390830I	2	VITE INOX TEIF M8X30 UNI 5739	SCREW TEIF M8X30 (S.S.) UNI 5739

LOADING PLATFORM

KIT PIATTAFORMA DI CARICO

XPL 1500

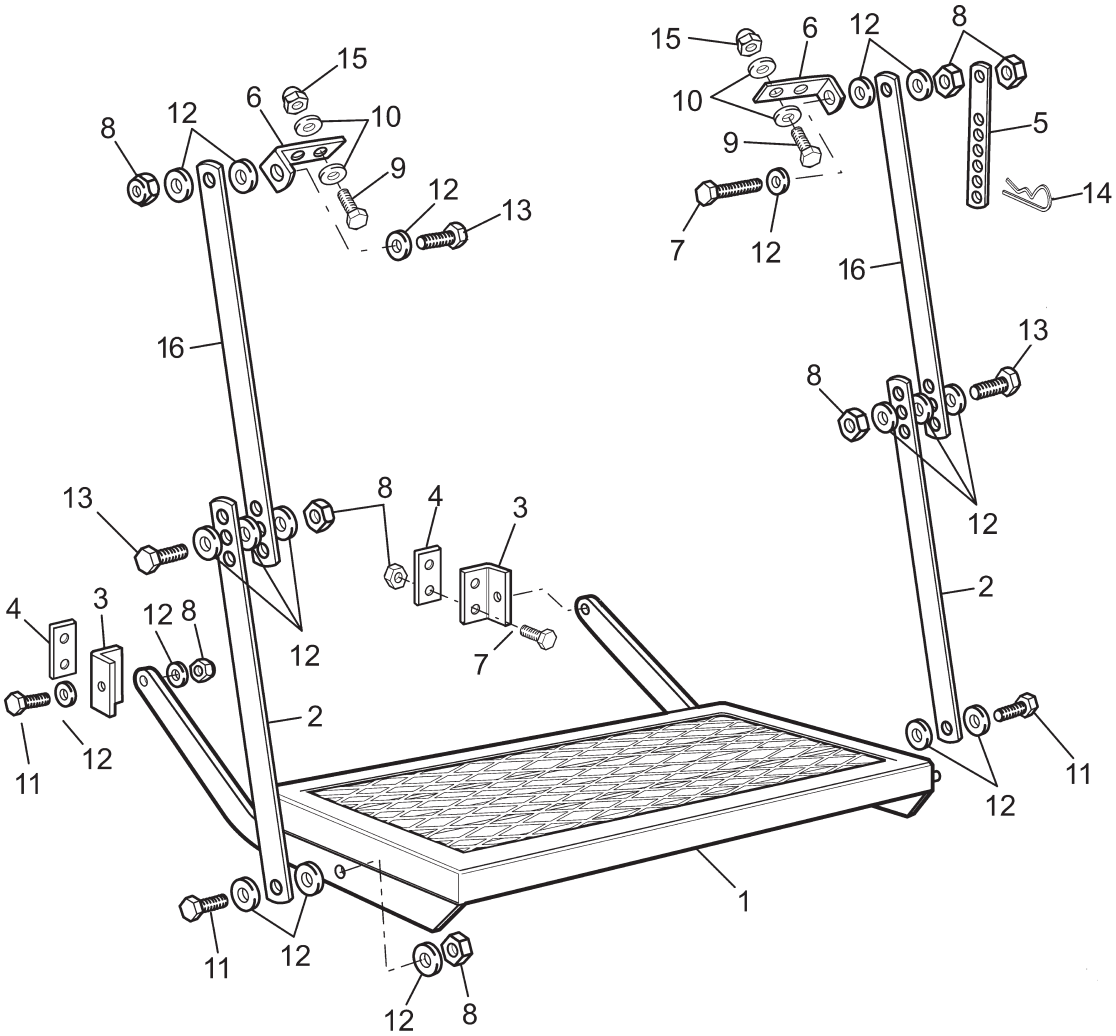

REF.	CODE	Q.TY	DESCRIZIONE	DESCRIPTION
1	PF0800	1	PIATTAFORMA XPL XPI	LOADING PLATFORM
2	PF0500	2	PIATTO SOSTEGNO PIATTAFORMA L.317	LOADING PLATFORM SUPPORT L.317
3	PF0200	2	CERNIERA	JOINT
4	PF0900	2	PIATTO FISSAGGIO	FIXING BLOCK
5	PF1000	1	RIGA FISSAGGIO PEDANA	LOADING PLATFORM FIXING PLATE
6	PF0400	2	CERNIERA SUPERIORE XPL-XPI	UPPER JOINT
7	57371050I	5	VITE INOX TEPF M10X50 UNI 5737	SCREW TEPF M10X50 (STAINLESS STEEL)
8	747410IN	13	DADO INOX AUTOBLOCCANTE MEDIO M10	NUT SELF-LOCKING M10 S. STEEL
9	57390820I	4	VITE INOX TEIF M8X20 UNI 5739	SCREW TEIF M8X20 (STAINLESS STEEL)
10	659208IN	8	RONDELLA INOX PIANA M8	PLAIN WASHER M8 (STAINLESS STEEL)
11	57391035I	4	VITE INOX TEIF M10X35 UNI 5739	SCREW TEIF M10X35 (S.S.) UNI 5739
12	659210IN	24	RONDELLA INOX PIANA M10	PLAIN WASHER M10 (STAINLESS STEEL)
13	57391030I	3	VITE INOX TEIF M10X30 UNI 5739	SCREW TEIF M10X30 (S.S.) UNI 5739
14	80100250	1	SPINA A R D.2 L.50	COTTER PIN A R D.2 L.50
15	572108IN	4	DADO INOX ESAGONALE CECO M8	NUT M8 (STAINLESS STEEL) UNI 5721
16	PF0700	2	PIATTO SOSTEGNO PIATTAFORMA L.411	LOADING PLATFORM SUPPORT L.411

BAR LIGHTS

BARRA LUCI

XPL 800

XPL 1000

XPL 1200

XPL 1500

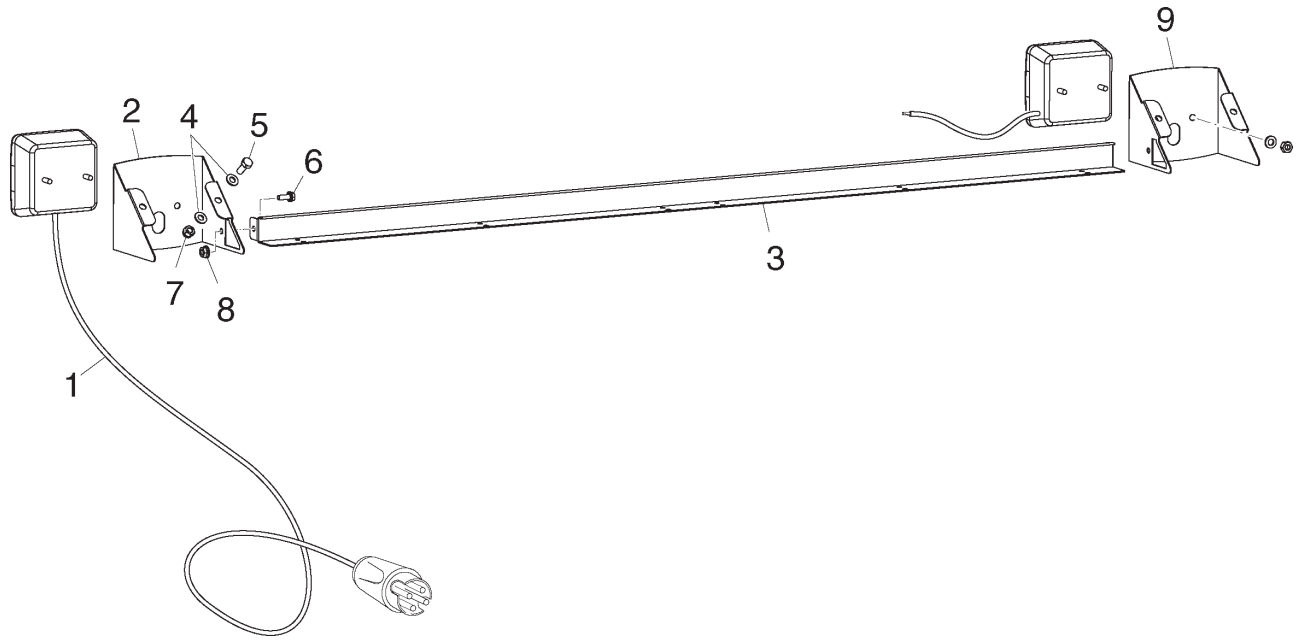

REF.	CODE	Q.TY	DESCRIZIONE	DESCRIPTION
1	30610004	1	KIT IMPIANTO EL.12 V PREMONTATO	ELECTRICAL SYSTEM KIT
2	L0810500	1	SOSTEGNO FANALE SINISTRO	SUPPORT LIGHT LEFT
3	L0810400	1	CANALINA FISSAGGIO FILO	BAR FIXING
4	659208IN	8	RONDELLA INOX PIANA M8	PLAIN WASHER M8 (STAINLESS STEEL)
5	52390820I	4	VITE INOX TEIF M8X20 UNI 5739	SCREW TEIF M8X20 (S.S.) UNI 5739
6	57400616I	2	VITE INOX F/ROND. M6X16	SCREW F/ROND. M6X16 (STAINLESS STEEL)
7	747408IN	4	DADO INOX AUTOBL. MEDIO M8	SELF-LOCKING NUT M8-A2 (S.S.)
8	559006IN	2	DADO INOX ES. C/RON. ZIG. M6	NUT M6 (STAINLESS STEEL)
9	L0810200	1	SOSTEGNO FANALE DESTRO	SUPPORT LIGHT RIGHT

AGREX S.p.A.
Via Balla, 55/57 – 35010 Villafranca Padovana (PD)
Tel. +39 049 9075684 – Fax +39 049 9075524

AGREX S.p.A.
Via Balla, 55/57 – 35010 Villafranca Padovana (PD)
Tel. +39 049 9075684 – Fax +39 049 9075524

Via Balla, 55/57 – 35010 Villafranca Padovana (PD)
Tel. +39 049 9075684 – Fax +39 049 9075524

8 Annex A - Stability of the tractor distributor combination

As a conseguence of mass of the spreader itself and of the materials present in the hopper, the tractor distributor combination may become unstable. For verify the total stabiliti, the following expression can be applied for the calculation of the minimun ballisting at the front of $I_{F,min}$ which allows to have a weight on the front axel equal to 20% of the unladen weight of the tractor:

$$I_{F,\min} = \frac{(I_R \times (c+d)) - (T_F \times b) + (0{,}2 \times T_E \times b)}{(a+b)}$$

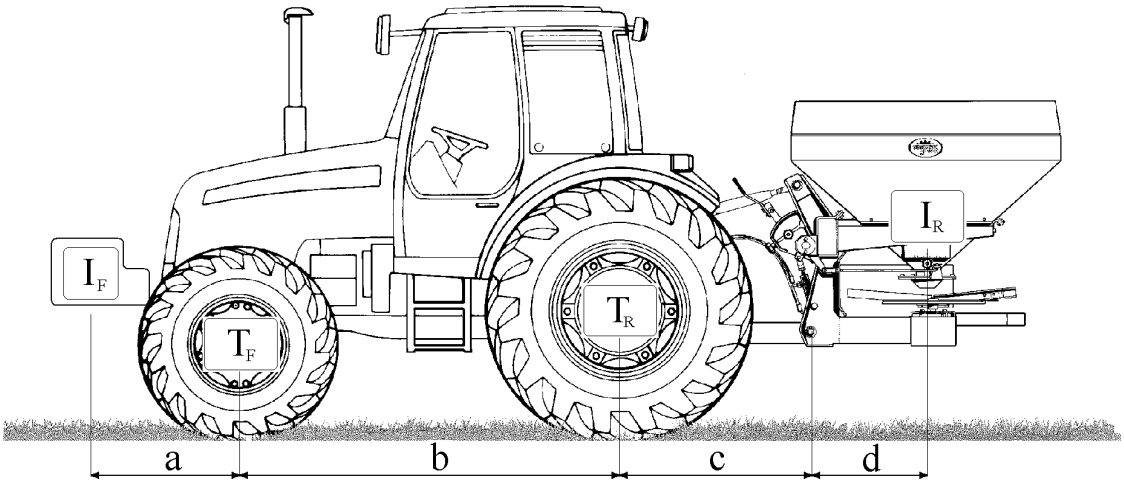

T_E [kg]	Unladen weight of tractor	①
T_F [kg]	Front axle load of unladen tractor	①
T_R [kg]	Rear axel load of unladen tractor	①
I_R [kg]	Combinated weight of rear mounted implement/rear ballast	②
I_F [kg]	Combinated weight of front mounted implement/front ballast	②
a [m]	Distance from centre of gravity for combined front mounted implement/front ballastat to front axle centre	② ③
b [m]	Tractor wheelbase	① ③
c [m]	Distance from rear axle centre to centre of lower link balls	① ③
d [m]	Distance from centre of lower link balls to centre of gravity for combined rear mounted implement/rear ballast (0.585 m)	② ③

① see instruction handbook of the tractor

② see price list and/or instruction handbook of the implement

③ to be mesured

AGREX S.p.A.
Via Balla, 55/57 – 35010 Villafranca Padovana (PD)
Tel. +39 049 9075684 – Fax +39 049 9075524

Spreading Tables

AGREX S.p.A.
Via Balla, 55/57 – 35010 Villafranca Padovana (PD)
Tel. +39 049 9075684 – Fax +39 049 9075524

Driving on the field

	SPREADING WIDHT		
	12 m	**18 m**	**24 m**
①	12 m	18 m	24 m
②	10 m	15 m	20 m
③	6 m	9 m	12 m

① Working width

② Distance from the headland of the field

③ Distance from the edge of the field

● Spreading starting point

○ Spreading end point

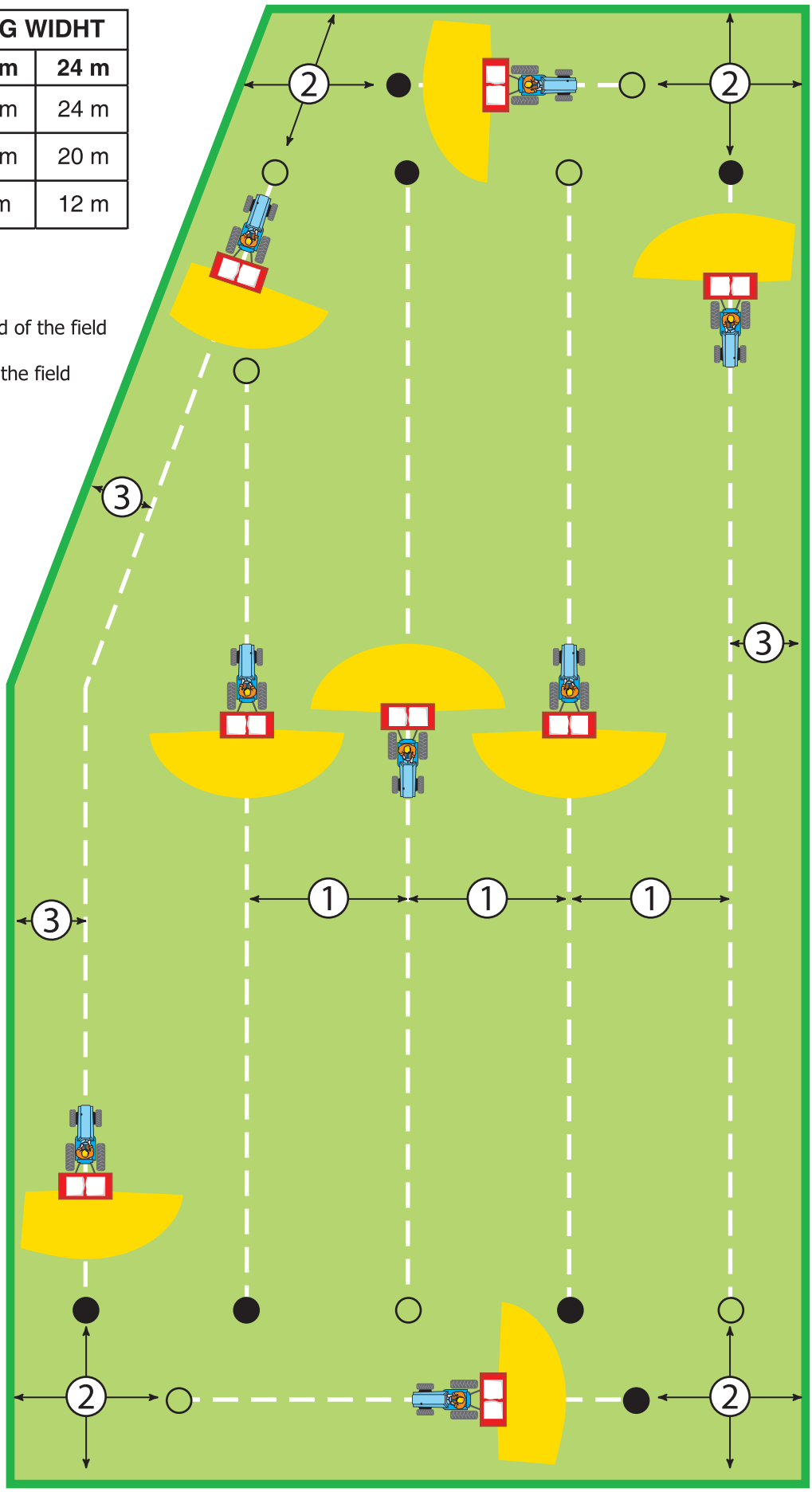

DIAGRAMS AND SPREADING TABLES

How to set the spreader

LATE TOP SPREADING

1 **18 Metres**

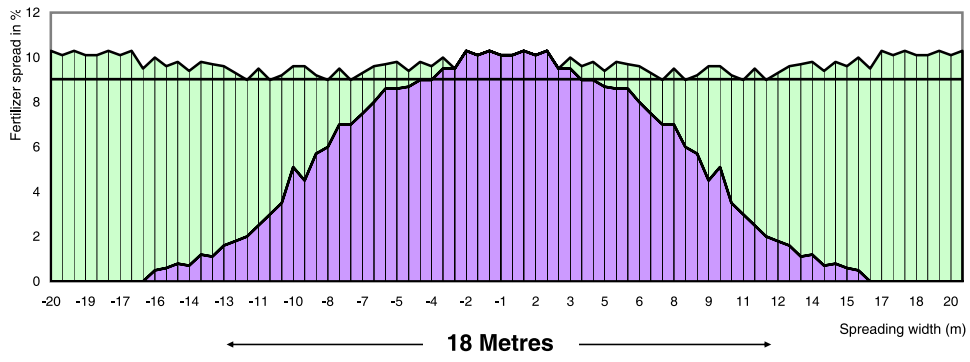

Type of blade to be assembled

2

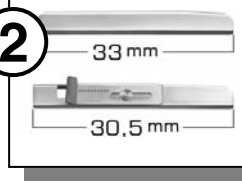

See table on side to adjust the blade

10

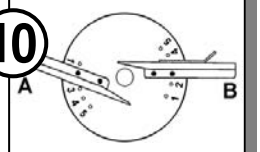

See table on side to adjust the opening lever

11

ADJUSTMENT TABLE

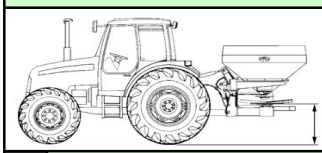

3

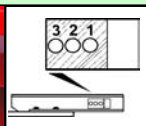

		5	6	7
				P.T.O
			N° holes per blade	Rev/min
1	AMMONIUM NITRATE 27% N (Ps= 1.050 kg/l)		4	500
2	UREA PRILLED 46% (Ps= 0.730 kg/l)	2		
3	POTASSIUM CHLORIDE 60%K2O (Ps= 1.035 kg/l)	1,5		
4	BASAMON 26%N + 35%SO3 (Ps= 0.935 kg/l)	2	4	500
5	NPK 20-3-8 S M6 (HYDRO) (Ps= 0.970 kg/l)	2	4	500

4

3

NPK 21 · · 10

Openin g lever	kg/min	Blade position		Sp d (km/h)				T
		A	B	8	10	12		
				kg/ha				
1	3,1	1	1	13	10	9		4
1,5	5,8	1	1	24	19	16		4
2	15,1	1	1	63	50	42		4
2,5	24,8	1	1	103	83	69		4
3	34,4	1	1	143	115	96		4
3,5	46,8	1	1	195	156	130		4
4	59,2	2	1	247	197	165		4
4,5	74,0	2	1	308	247	206		4
5	88,6	2	1	369	295	246		4
5,5	104,8	2	1	437	349	291		4
6	121,0	2	1	504	403	336		4
6,5	139,4	2	1	581	465	387		4
7	157,3	2	1	655	524	437		4
7,5	177,0	2	1	738	590	492		4
8	196,9	2	1	820	656	547		4
8,5	210,4	2	1	877	701	584		4
9	224,0	2	1	933	747	622		4
9,5	229,6	2	1	957	765	638		4
10	235,3	2	1	980	784	654		4

8 9 10 11 12

1. Choose type and width spreading.
2. Assemble the blade on the spreading disk.
3. Working position of the spreader to keep for the spreading.
4. Fertilizer type to be spread.
5. Adjust the spreading control lever.
6. Adjust the B-type blade.
7. Spreading P.T.O. speed rotation.
8. Choose the spreading speed.
9. Choose the quantity (kg/h) of fertilizer to be spread.
10. Adjust blade position.
11. Adjust the product quantity control levers.
12. For the late-top spreading adjust the spreader tilt.

Via Balla, 55/57 – 35010 Villafranca Padovana (PD)
Tel. +39 049 9075684 – Fax +39 049 9075524

Adjustment of the spreader with a new fertiliser type

Fertilizer that can be spreader

This centrifugal action fertilizer spreader can be used to spread fertilizer with the following characteristics (as defined in EN 13739-2 Standard):

Type A fertilizer: Granular fertilizer
Specific weight (or density): greater than 0.9 kg/l
Grain size: diameter between 2.5 and 4.2 mm

Type B fertilizer: Granular fertilizer
Specific weight: less than 0.9 kg/l (0.7 - 0.9)
Grain size: diameter between 1.8 and 4.2 mm

Type C fertilizer: Prilled-type granular mineral fertilizer
Specific weigh: greater than 0.9 kg/l
Grain size: diameter between 1.5 and 3.5 mm

Type D fertilizer: Prilled-type granular mineral fertilizer
Specific weigh: lower than 0.9 kg/l (0.7 - 0.9)
Grain size: diameter between 1.5 and 3.5 mm

Type E fertilizer: Compacted fertilizer
Specific weigh: greater than 0.7 kg/l
Grain size: diameter between 2.5 and 5.0 mm

The spreading tables provide the adjustments required for each type of fertilizer.
In particular:

Type A fertilizer:	NS 24 – 6
Type B fertilizer:	UREA GRANULARE
Type C fertilizer:	NPK 21 – 3 – 10
Type D fertilizer:	UREA PRILLED
Type E fertilizer:	KORN – KALI 40/6

Via Balla, 55/57 – 35010 Villafranca Padovana (PD)
Tel. +39 049 9075684 – Fax +39 049 9075524

New fertilizer

To spread a type of fertiliser different from the ones listed in the spreading charts, it is necessary to do some spreading tests in order to find the adjusting parameters of the new fertiliser type.

1. Read the physical characteristics (density, grain side, etc.) provided by the producer of the fertilizer and then provide such type of fertilizer to be used with classification.
   For example:
   If the technical characteristics provided by the fertilizer producer indicate that the fertilizer to be spread is of the prilled type with a specific weight of greater than 0.9 kg/l, this means that the respective fertilizer is a Type C fertilizer.

2. Set the machine by consulting the spreading tables provided for other types of fertilizer in the same Class:

For example:
If the fertilizer to be spread is a Type A fertilizer, consult the spreading table for NS 24 – 6 fertilizer

Make sure that all the settings are correct by first testing the setting of the flow rate and then conducting spreading tests.

Spreading test

1. Place the five collecting containers along the working distance (see the picture).

2. Make 3 passes with the spreader, adjusting the machine as instructed in the manual. Bear in mind that the height indicated must be taken from the upper edge of the trays.

3. Weigh the fertiliser dropped in the collecting containers.

4. Draw up the spreading diagram.

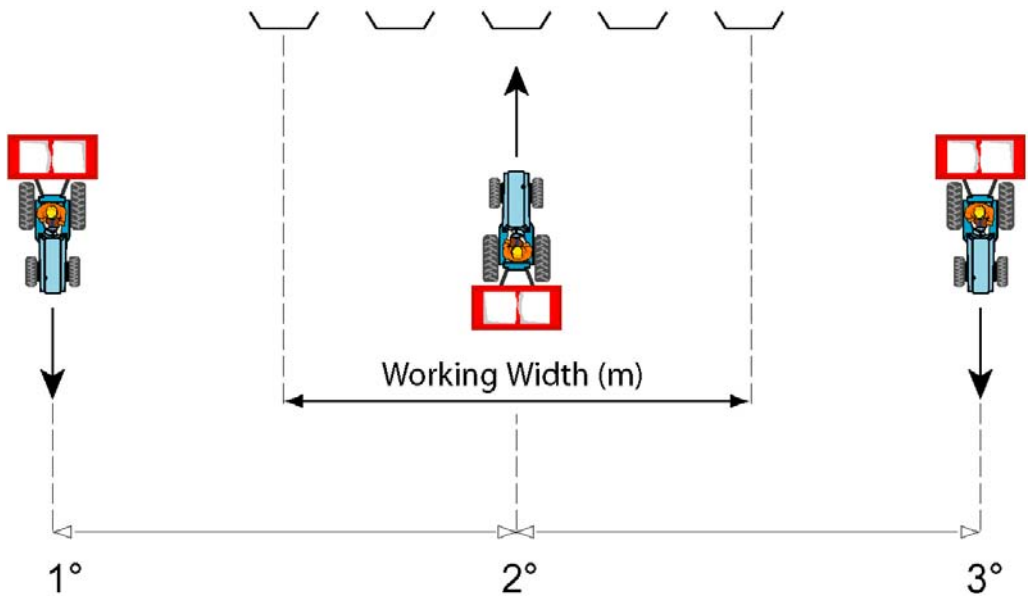

Distribution test. Layout of collection trays and passes to be made.

Via Balla, 55/57 – 35010 Villafranca Padovana (PD)
Tel. +39 049 9075684 – Fax +39 049 9075524

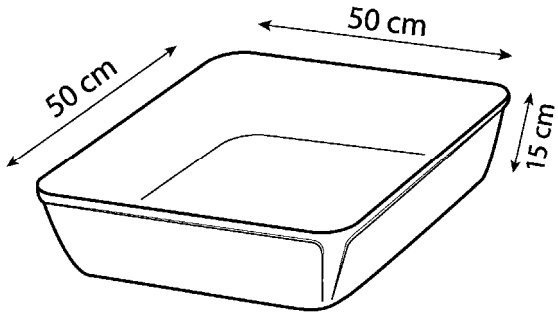

Collection tray. Shape and size of collection tray to be used during distribution test.

Estimation of the results and adjustments

The graphs below show the typical patterns that can be achieved during spreading tests.

In the graphs featured, the amount of fertilizer contained in the collection trays is given as a percentage. To interpret the graphs correctly, you should bear in mind that the reference value, which is 100%, is given by the amount of fertilizer collected in the individual containers when the fertilizer spreader is adjusted to produce even, uniform distribution (Optimal spreading).

$$Reference\ value\ (100\%) = \frac{Concentration\ of\ \ fertilizer\ in\ g/ha\ to\ be\ distributed}{40000}$$

Note. The term 40,000 is given by the number of trays measuring 50x50 cm that fit on a hectare of land.

The *reference value* obtained above is a theoretical value. In reality however, the grains of fertilizer sometimes bounce and a part bounces out of the collection containers during spreading tests. For this reason, even under ideal spreading conditions, the quantity of fertilizer that can be collected in every single container will be lower than the theoretical reference value obtained above.
In order to plot the graph with greater precision, we recommend taking the *average collected value* that is obtained as the average value of the quantity of fertilizer collected in all the single containers as reference.

$$Average\ collected\ value = \frac{Quantity\ in\ Container\ 1 + Qty.\ in\ Cont.\ 2 + ... + Qty.\ in\ Container\ 5}{5}$$

Nota The *average collected value* calculation must be repeated for every fertilizer spreading test.

Via Balla, 55/57 – 35010 Villafranca Padovana (PD)
Tel. +39 049 9075684 – Fax +39 049 9075524

The percentage value of fertilizer contained in a collection tray is given by:

$$Percentage\,content = \frac{Amount\ of\ \ fertilizer\ in\ g}{Average\,collected\ value} \cdot 100$$

Depending on the resulting distribution graph, you may need to adjust the fertilizer spreader to achieve optimal distribution over the field (graph G).

Warning. When performing adjustments to optimize the spreading graphs, it is best to perform just one adjustment at a time so as to understand how the machine reacts to each single alteration and hence learn how to adjust the fertilizer spreader. (for instance, do not move the short blades and long blades at the same time as this may be confusing).

Type A diagram: Too much fertiliser on the sides.

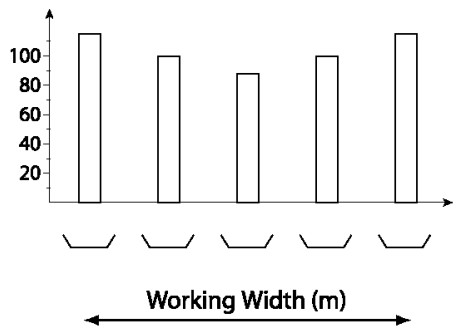

A

Adjustment: Draw back the vanes on the discs to the highest positions (for example if the vane is set on position n. 2, move it to position n. 3, 4 or 5).
Move the longest vane first, then do a spreading test.
If there is still a lack of fertiliser in the centre, move the shortest vane as well.

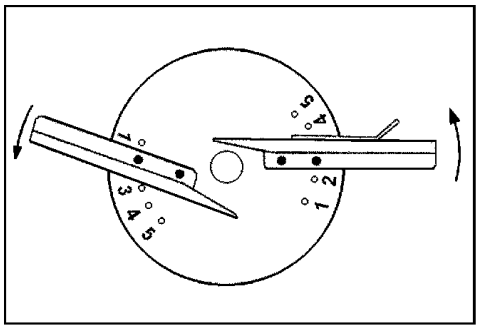

Example: how to move the vanes to the highest positions.

Via Balla, 55/57 – 35010 Villafranca Padovana (PD)
Tel. +39 049 9075684 – Fax +39 049 9075524

Type B diagram: Too much fertiliser on the centre.

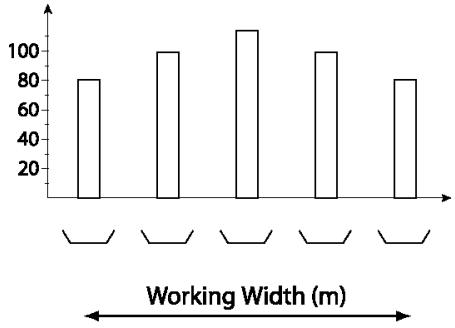

B

Adjustment: push the vanes on the discs to the lowest positions (for example if the vane is set on position n. 4, move it to position n. 3, 2 or 1).
Move the longest vane first, then do a spreading test.
If there is still an excess of fertiliser on the centre, move the shortest vane as well.

Note on the adjustments

The adjustment of the short vanes position modifies the spreading diagram in the central part (spreading of fertiliser within the first 5-7 meters from the centre), while the adjustment of the long vanes position modifies the spreading diagram in the outer part (spreading of fertiliser beyond 6-10 meters).

Type C diagram: Too much fertilizer just at ends of working width.

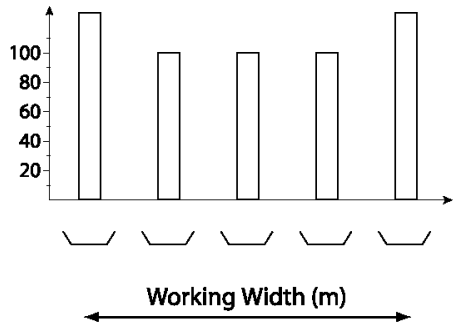

C

Adjustment: Move just the long blades to higher settings (for instance, if the long blade is on setting 1, move it to 2-3).

Via Balla, 55/57 – 35010 Villafranca Padovana (PD)
Tel. +39 049 9075684 – Fax +39 049 9075524

Type D diagram: Too little fertilizer just at ends of working width.

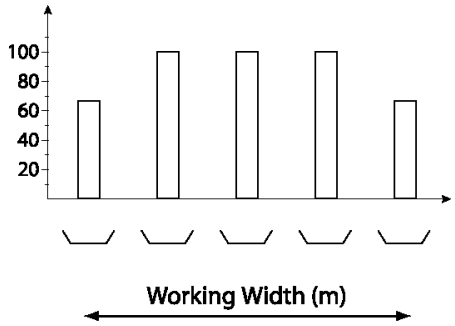

D

Adjustment: Move just the long blades to lower settings (for instance, if the long blade is on setting 3, move it to 2-1).

Type E diagram: Slightly too much fertilizer just at centre of the swath.

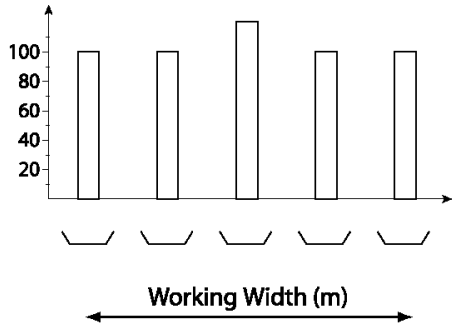

E

Adjustment: To eliminate excessive fertilizer at the centre of the swath, you have to close the short blade gap, i.e. move the position of the blade to a higher setting (for instance, if the blade is on setting 3, move it to 4 – 5).

Type F diagram: Slightly too little fertilizer just at centre of the swath.

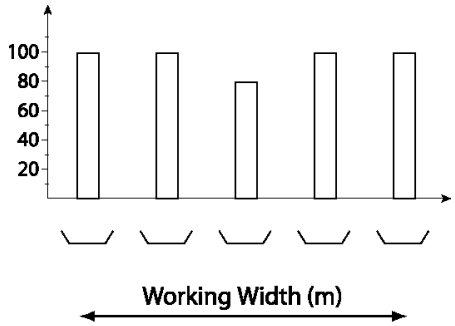

F

Adjustment: To eliminate the lack of fertilizer at the centre of the swath, you have to open the short blade gap, i.e. move the position of the blade to a lower setting (for instance, if the blade is on setting 3, move it to 1 – 2).

Via Balla, 55/57 – 35010 Villafranca Padovana (PD)
Tel. +39 049 9075684 – Fax +39 049 9075524

Adjustment of the short blades shutter

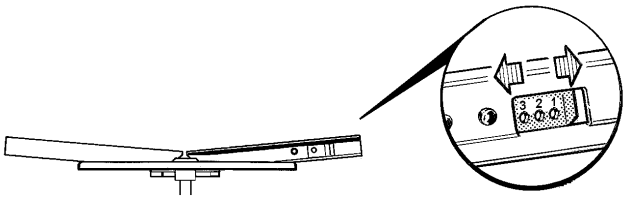

The short blades have a port that can be adjusted by sliding shutters. According to the shutter position it is possible to direct the fertiliser drop on the centre the spreading width.
In particular, if we shift the sliding shutter to another adjusting hole towards the port closing, a certain quantity of fertiliser is shifted from 2-4 meters from the centre of the spreading width to 5-7 meters out of the centre.
On the contrary, if we open the port, a certain quantity of fertiliser is shifted from the outer 5-7 meters of the spreading width to the centre.

Type G diagram: Optimum adjustment. So it is possible to spread the fertiliser on the field.

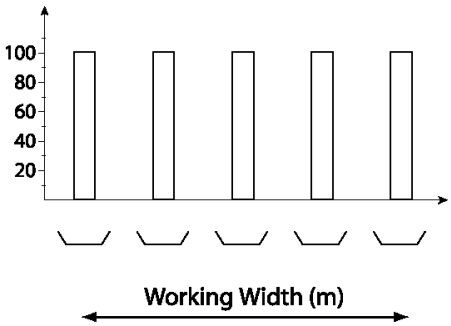

G

Via Balla, 55/57 – 35010 Villafranca Padovana (PD)
Tel. +39 049 9075684 – Fax +39 049 9075524

Late top Spreading

The measurements are taken on the top of the disc

To get the late top spreading proceed as follows:

- Recline the spreader. (See spreading table and the reclining scale on the side of spreader).
- The spreading disc must have a height of 50 cm from the crops height (see figure below).
- For settings please see the spreading tables and the setting indications of the machine with new fertilizer.

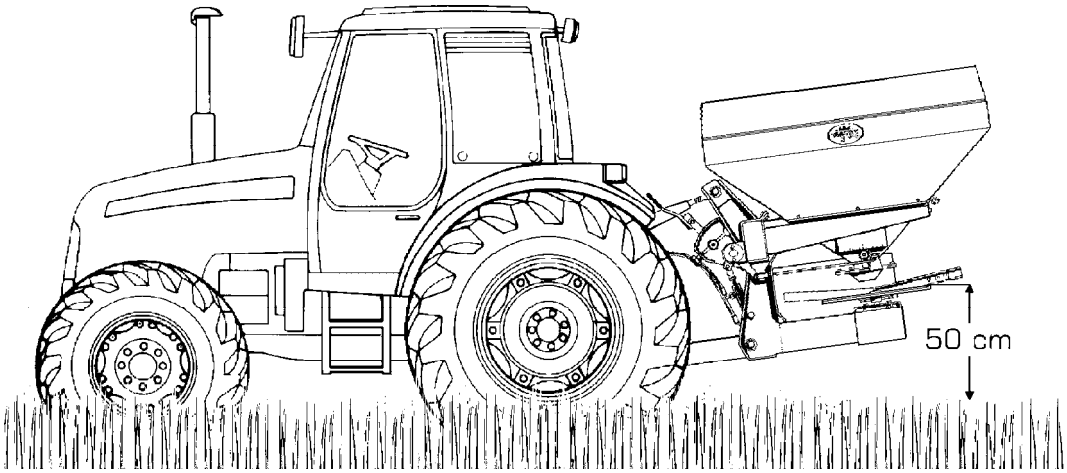

LATE TOP SPREADING

Note. The height of vegetation reduces the distance the fertilizer is thrown. This is why the fertilizer spreader must be tilted during post-emergence fertilizer application.

Optimizing spreading and machine adjustment for a different type of fertilizer

Perform the same procedure used to optimize normal spreading, keeping the machine tilted by the angle given in the charts and 50 cm above the top edge of the trays.

NORMAL SPREADING

12 Metres

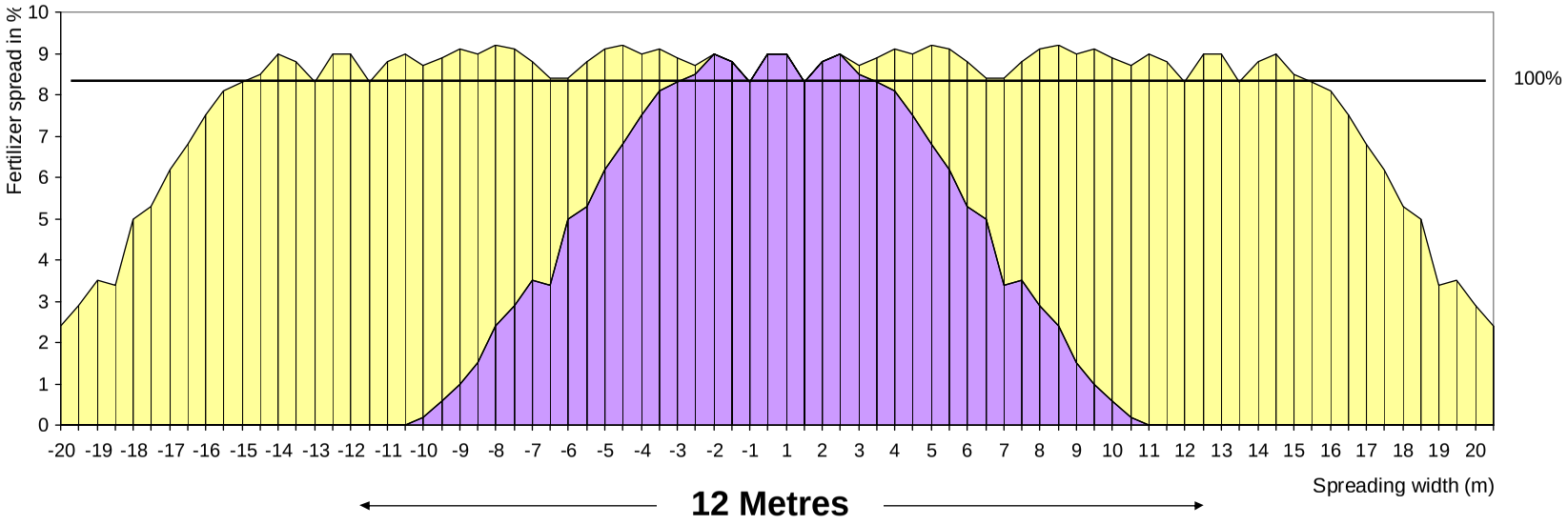

Type of blade to be assembled

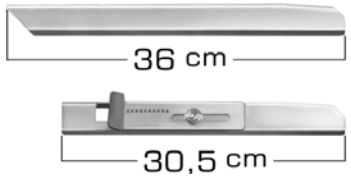

See table on side to adjust the blade

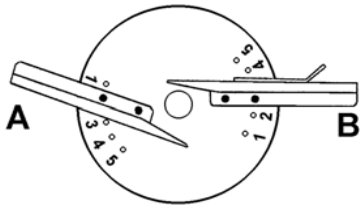

See table on side to adjust the opening lever

ADJUSTMENT TABLE

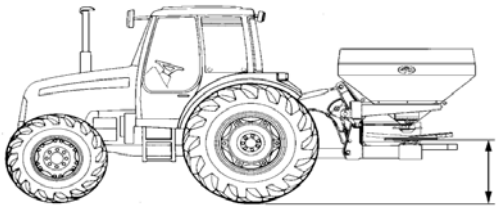

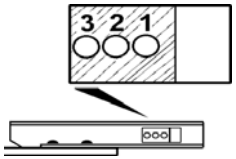

			N° holes per blade	P.T.O Rev/min
1	KORN - KALI 40/6	A	7	500
2	NS 24 - 6	A	7	500
3	NPK 21 - 3 - 10	A	7	500
4	UREA 46% N PRILLS (Ps= 0.75)	C	6	500
5	UREA PIAGRAN 46 (Ps= 0.78 g/l)	D	6	500

NORMAL SPREADING

12 Metres

1 KORN - KALI 40/6

Opening lever	kg/min	Blade position		Speed (km/h)			Border deflector position.
				8	10	12	
		A	B	kg/ha			
1	0,0	3	5	0	0	0	3
1,5	8,7	3	5	55	44	36	3
2	11,0	3	5	69	55	46	3
2,5	22,2	3	5	139	111	93	3
3	33,6	3	5	210	168	140	3
3,5	43,8	3	5	274	219	183	3
4	56,6	3	5	354	283	236	3
4,5	69,6	3	5	435	348	290	3
5	84,2	3	5	526	421	351	3
5,5	98,6	4	5	616	493	411	3
6	113,5	4	5	710	568	473	3
6,5	129,2	4	5	808	646	538	3
7	145,1	4	5	907	726	605	3
7,5	161,4	4	5	1009	807	673	3
8	175,4	4	5	1096	877	731	3
8,5	193,0	4	5	1206	965	804	3
9	206,2	4	5	1289	1031	859	3
9,5	213,6	4	5	1335	1068	890	3
10	216,4	4	5	1353	1082	902	3

2 NS 24 - 6

Opening lever	kg/min	Blade position		Speed (km/h)			Border deflector position.
				8	10	12	
		A	B	kg/ha			
1	2,8	3	5	18	14	12	10
1,5	5,4	3	5	34	27	23	10
2	13,6	3	5	85	68	57	10
2,5	21,0	3	5	131	105	88	10
3	29,7	3	5	186	149	124	10
3,5	39,6	3	5	248	198	165	10
4	51,0	3	5	319	255	213	10
4,5	62,6	3	5	391	313	261	5
5	75,2	3	5	470	376	313	5
5,5	88,6	4	5	554	443	369	5
6	102,7	4	5	642	514	428	5
6,5	117,0	4	5	731	585	488	5
7	131,8	4	5	824	659	549	5
7,5	149,6	4	5	935	748	623	5
8	166,0	4	5	1038	830	692	5
8,5	178,0	4	5	1113	890	742	5
9	189,4	4	5	1184	947	789	5
9,5	201,0	4	5	1256	1005	838	5
10	210,0	4	5	1313	1050	875	5

3 NPK 21 - 3 - 10

Opening lever	kg/min	Blade position		Speed (km/h)			Border deflector position.
				8	10	12	
		A	B	kg/ha			
1	3,1	3	5	19	15	13	5
1,5	5,8	3	5	36	29	24	5
2	15,1	3	5	94	76	63	5
2,5	24,8	3	5	155	124	103	5
3	34,4	3	5	215	172	143	5
3,5	46,8	3	5	293	234	195	5
4	59,2	3	5	370	296	247	5
4,5	74,0	3	5	463	370	308	5
5	88,6	3	5	554	443	369	5
5,5	104,8	4	5	655	524	437	5
6	121,0	4	5	757	605	504	5
6,5	139,4	4	5	871	697	581	5
7	157,3	4	5	983	786	655	5
7,5	177,0	4	5	1106	885	738	5
8	196,9	4	5	1231	985	820	5
8,5	210,4	4	5	1315	1052	877	5
9	224,0	4	5	1400	1120	933	5
9,5	229,6	4	5	1435	1148	957	5
10	235,3	4	5	1471	1177	980	5

4 UREA 46% N PRILLS (Ps= 0.75)

Opening lever	kg/min	Blade position		Speed (km/h)			Border deflector position.
				8	10	12	
		A	B	kg/ha			
1	6,0	3	5	38	30	25	4
1,5	11,9	3	5	74	60	50	4
2	19,8	3	5	123	99	82	4
2,5	28,3	3	5	177	142	118	4
3	38,6	3	5	241	193	161	4
3,5	49,8	3	5	311	249	207	4
4	62,2	3	5	389	311	259	4
4,5	74,1	3	5	463	371	309	4
5	87,0	4	5	544	435	363	4
5,5	101,1	4	5	632	506	421	4
6	117,2	4	5	733	586	488	4
6,5	132,2	4	5	826	661	551	4
7	147,8	4	5	924	739	616	4
7,5	165,1	4	5	1032	826	688	4
8	183,8	4	5	1149	919	766	4
8,5	203,1	4	5	1269	1016	846	4
9	222,7	4	5	1392	1114	928	4
9,5	240,0	4	5	1500	1200	1000	4
10	253,0	4	5	1581	1265	1054	4

5 UREA PIAGRAN 46 (Ps= 0.78 g/l)

Opening lever	kg/min	Blade position		Speed (km/h)			Border deflector position.
				8	10	12	
		A	B	kg/ha			
1	3,7	3	4	23	19	16	8
1,5	7,4	3	4	46	37	31	8
2	11,8	3	5	74	59	49	8
2,5	17,5	3	5	109	87	73	8
3	20,3	3	5	127	102	85	8
3,5	22,8	3	5	143	114	95	8
4	34,0	3	5	213	170	142	8
4,5	47,0	4	5	294	235	196	8
5	61,8	4	5	386	309	258	8
5,5	70,2	4	5	439	351	293	8
6	84,2	4	5	526	421	351	8
6,5	95,7	4	5	598	479	399	8
7	108,8	4	5	680	544	453	8
7,5	121,5	4	5	760	608	506	8
8	135,3	4	5	846	677	564	8
8,5	149,5	4	5	934	748	623	8
9	163,9	4	5	1024	820	683	8
9,5	176,7	4	5	1104	883	736	8
10	186,2	4	5	1164	931	776	8

For the border spreading keep a distance from the edge of the field of 6 meters from the central tractor axe and provide for a 30% reduction of fertilizer dose on the border side.

NORMAL SPREADING

15 Metres

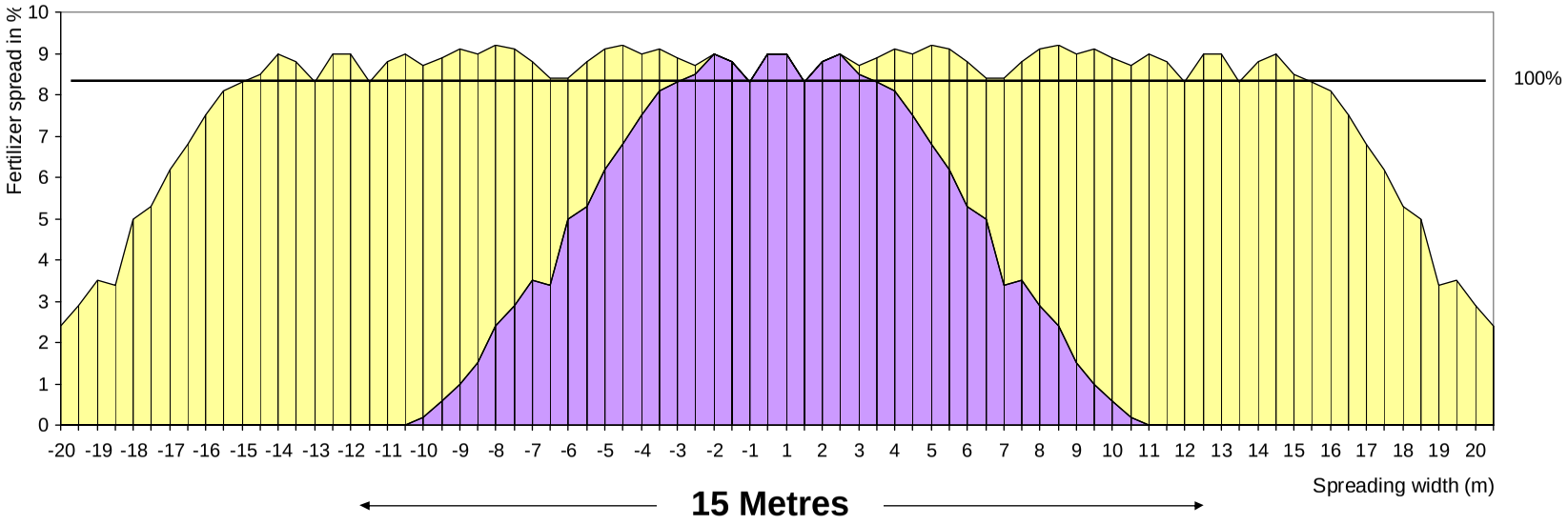

Type of blade to be assembled

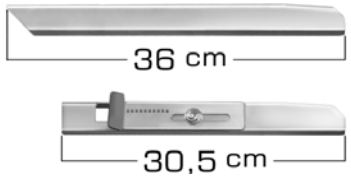

See table on side to adjust the blade

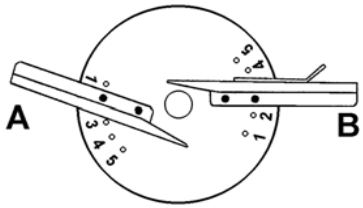

See table on side to adjust the opening lever

ADJUSTMENT TABLE

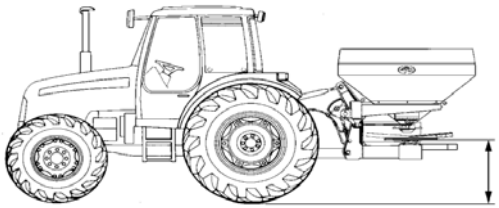

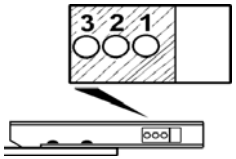

			N° holes per blade	P.T.O Rev/min
1	KORN - KALI 40/6	A	5	520
2	NS 24 - 6	B	6	520
3	NPK 21 - 3 - 10	B	6	520
4	UREA 46% N PRILLS (Ps= 0.75)	C	6	520
5	UREA PIAGRAN 46 (Ps= 0.78 g/l)	E	6	520

NORMAL SPREADING

15 Metres

1 KORN - KALI 40/6

Opening lever	kg/min	Blade position		Speed (km/h)			Border deflector position.
				8	10	12	
		A	B	kg/ha			
1	0,0	3	5	0	0	0	2
1,5	8,7	3	5	44	35	29	2
2	11,0	3	5	55	44	37	2
2,5	22,2	3	5	111	89	74	2
3	33,6	3	5	168	134	112	2
3,5	43,8	3	5	219	175	146	2
4	56,6	3	5	283	226	189	2
4,5	69,6	3	5	348	278	232	2
5	84,2	3	5	421	337	281	2
5,5	98,6	4	5	493	394	329	2
6	113,5	4	5	568	454	378	2
6,5	129,2	4	5	646	517	431	2
7	145,1	4	5	726	581	484	2
7,5	161,4	4	5	807	646	538	2
8	175,4	4	5	877	702	585	2
8,5	193,0	4	5	965	772	643	2
9	206,2	4	5	1031	825	687	2
9,5	213,6	4	5	1068	854	712	2
10	216,4	4	5	1082	866	721	2

2 NS 24 - 6

Opening lever	kg/min	Blade position		Speed (km/h)			Border deflector position.
				8	10	12	
		A	B	kg/ha			
1	2,8	2	4	14	11	9	10
1,5	5,4	2	4	27	22	18	10
2	13,6	2	4	68	54	45	10
2,5	21,0	2	4	105	84	70	10
3	29,7	2	4	149	119	99	10
3,5	39,6	2	4	198	158	132	10
4	51,0	2	4	255	204	170	10
4,5	62,6	2	4	313	250	209	5
5	75,2	2	4	376	301	251	5
5,5	88,6	4	5	443	354	295	5
6	102,7	4	5	514	411	342	5
6,5	117,0	4	5	585	468	390	5
7	131,8	4	5	659	527	439	5
7,5	149,6	4	5	748	598	499	5
8	166,0	4	5	830	664	553	5
8,5	178,0	4	5	890	712	593	5
9	189,4	4	5	947	758	631	5
9,5	201,0	4	5	1005	804	670	5
10	210,0	4	5	1050	840	700	5

3 NPK 21 - 3 - 10

Opening lever	kg/min	Blade position		Speed (km/h)			Border deflector position.
				8	10	12	
		A	B	kg/ha			
1	3,1	2	4	15	12	10	6
1,5	5,8	2	4	29	23	19	6
2	15,1	2	4	76	60	50	6
2,5	24,8	2	4	124	99	83	6
3	34,4	2	4	172	138	115	6
3,5	46,8	2	4	234	187	156	6
4	59,2	2	4	296	237	197	6
4,5	74,0	2	4	370	296	247	6
5	88,6	2	4	443	354	295	6
5,5	104,8	2	4	524	419	349	6
6	121,0	4	5	605	484	403	6
6,5	139,4	4	5	697	558	465	6
7	157,3	4	5	786	629	524	6
7,5	177,0	4	5	885	708	590	6
8	196,9	4	5	985	788	656	6
8,5	210,4	4	5	1052	842	701	6
9	224,0	4	5	1120	896	747	6
9,5	229,6	4	5	1148	918	765	6
10	235,3	4	5	1177	941	784	6

4 UREA 46% N PRILLS (Ps= 0.75)

Opening lever	kg/min	Blade position		Speed (km/h)			Border deflector position.
				8	10	12	
		A	B	kg/ha			
1	6,0	3	5	30	24	20	2
1,5	11,9	3	5	60	48	40	2
2	19,8	3	5	99	79	66	2
2,5	28,3	3	5	142	113	94	2
3	38,6	3	5	193	154	129	2
3,5	49,8	3	5	249	199	166	2
4	62,2	3	5	311	249	207	2
4,5	74,1	3	5	371	297	247	2
5	87,0	4	5	435	348	290	2
5,5	101,1	4	5	506	404	337	2
6	117,2	4	5	586	469	391	2
6,5	132,2	4	5	661	529	441	2
7	147,8	4	5	739	591	493	2
7,5	165,1	4	5	826	660	550	2
8	183,8	4	5	919	735	613	2
8,5	203,1	4	5	1016	812	677	2
9	222,7	4	5	1114	891	742	2
9,5	240,0	4	5	1200	960	800	2
10	253,0	4	5	1265	1012	843	2

5 UREA PIAGRAN 46 (Ps= 0.78 g/l)

Opening lever	kg/min	Blade position		Speed (km/h)			Border deflector position.
				8	10	12	
		A	B	kg/ha			
1	3,7	3	4	19	15	12	7
1,5	7,4	3	4	37	30	25	7
2	11,8	3	5	59	47	39	7
2,5	17,5	3	5	87	70	58	7
3	20,3	3	5	102	81	68	7
3,5	22,8	3	5	114	91	76	7
4	34,0	3	5	170	136	113	7
4,5	47,0	4	5	235	188	157	7
5	61,8	4	5	309	247	206	7
5,5	70,2	4	5	351	281	234	7
6	84,2	4	5	421	337	281	7
6,5	95,7	4	5	479	383	319	7
7	108,8	4	5	544	435	363	7
7,5	121,5	4	5	608	486	405	7
8	135,3	4	5	677	541	451	7
8,5	149,5	4	5	748	598	498	7
9	163,9	4	5	820	656	546	7
9,5	176,7	4	5	883	707	589	7
10	186,2	4	5	931	745	621	7

For the border spreading keep a distance from the edge of the field of 7,5 meters from the central tractor axe and provide for a 30% reduction of fertilizer dose on the border side.

NORMAL SPREADING

18 Metres

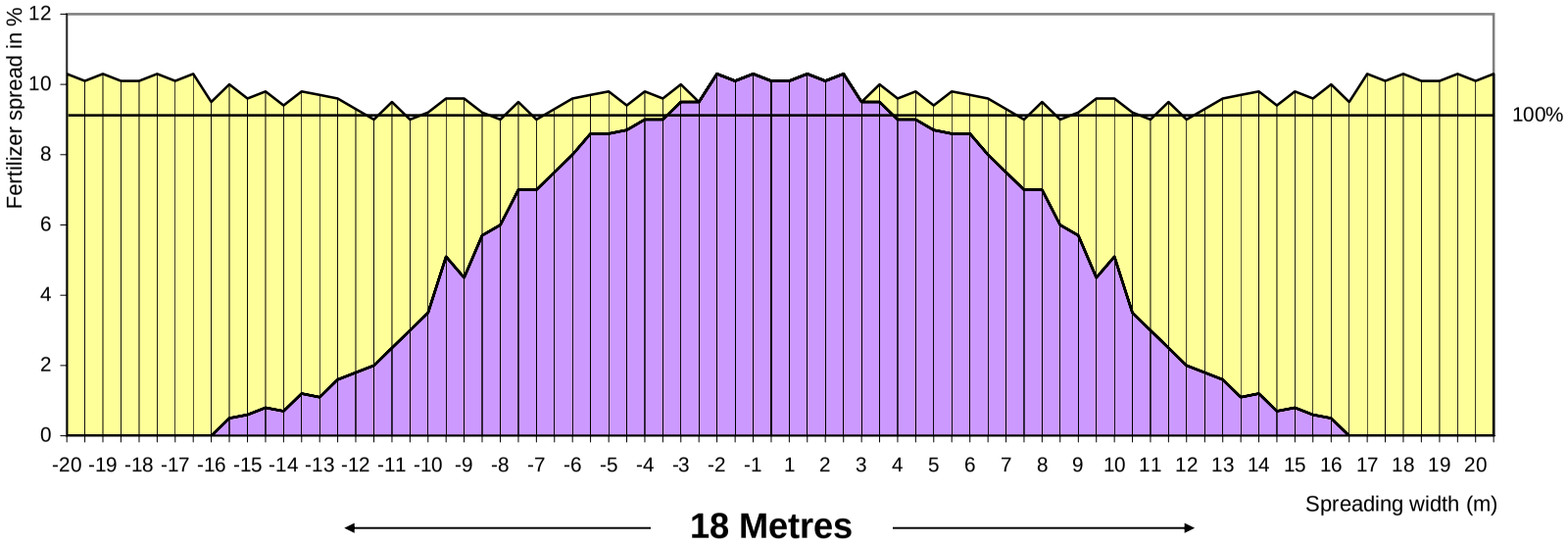

Type of blade to be assembled

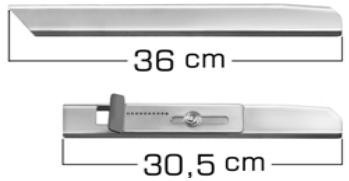

See table on side to adjust the blade

See table on side to adjust the opening lever

ADJUSTMENT TABLE

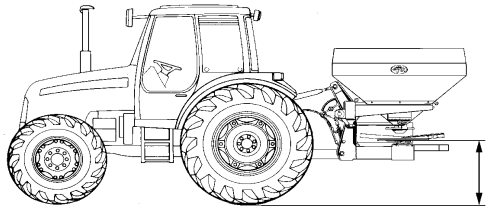

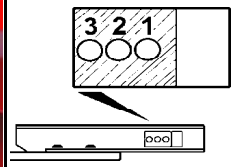

			N° holes per blade	P.T.O Rev/min
1	KORN - KALI 40/6	B	4	540
2	NS 24 - 6	C	5	540
3	NPK 21 - 3 - 10	D	5	540
4	UREA 46% N PRILLS (Ps= 0.75)	D	5	540
5	UREA PIAGRAN 46 (Ps= 0.78 g/l)	F	7	540

NORMAL SPREADING

18 Metres

1 KORN - KALI 40/6

Opening lever	kg/min	Blade position		Speed (km/h)			Border deflector position.
				8	10	12	
		A	B	kg/ha			
1	0,0	2	5	0	0	0	1
1,5	8,7	2	5	36	29	24	1
2	11,0	2	5	46	37	31	1
2,5	22,2	3	5	93	74	62	1
3	33,6	3	5	140	112	93	1
3,5	43,8	3	5	183	146	122	1
4	56,6	3	5	236	189	157	1
4,5	69,6	4	5	290	232	193	1
5	84,2	4	5	351	281	234	1
5,5	98,6	4	5	411	329	274	1
6	113,5	4	5	473	378	315	1
6,5	129,2	4	5	538	431	359	1
7	145,1	4	5	605	484	403	1
7,5	161,4	5	5	673	538	448	1
8	175,4	5	5	731	585	487	1
8,5	193,0	5	5	804	643	536	1
9	206,2	5	5	859	687	573	1
9,5	213,6	5	5	890	712	593	1
10	216,4	5	5	902	721	601	1

2 NS 24 - 6

Opening lever	kg/min	Blade position		Speed (km/h)			Border deflector position.
				8	10	12	
		A	B	kg/ha			
1	2,8	1	3	12	9	8	10
1,5	5,4	1	3	23	18	15	10
2	13,6	1	3	57	45	38	10
2,5	21,0	1	3	88	70	58	10
3	29,7	1	3	124	99	83	10
3,5	39,6	1	3	165	132	110	10
4	51,0	1	4	213	170	142	10
4,5	62,6	1	4	261	209	174	6
5	75,2	1	4	313	251	209	6
5,5	88,6	1	4	369	295	246	6
6	102,7	1	5	428	342	285	6
6,5	117,0	1	5	488	390	325	6
7	131,8	1	5	549	439	366	6
7,5	149,6	1	5	623	499	416	6
8	166,0	1	5	692	553	461	6
8,5	178,0	1	5	742	593	494	6
9	189,4	1	5	789	631	526	6
9,5	201,0	1	5	838	670	558	6
10	210,0	1	5	875	700	583	6

3 NPK 21 - 3 - 10

Opening lever	kg/min	Blade position		Speed (km/h)			Border deflector position.
				8	10	12	
		A	B	kg/ha			
1	3,1	1	3	13	10	9	7
1,5	5,8	1	3	24	19	16	7
2	15,1	1	3	63	50	42	7
2,5	24,8	1	3	103	83	69	7
3	34,4	1	3	143	115	96	7
3,5	46,8	1	4	195	156	130	7
4	59,2	1	4	247	197	165	7
4,5	74,0	1	4	308	247	206	7
5	88,6	1	5	369	295	246	7
5,5	104,8	1	5	437	349	291	7
6	121,0	1	5	504	403	336	7
6,5	139,4	1	5	581	465	387	7
7	157,3	1	5	655	524	437	7
7,5	177,0	1	5	738	590	492	7
8	196,9	1	5	820	656	547	7
8,5	210,4	1	5	877	701	584	7
9	224,0	1	5	933	747	622	7
9,5	229,6	1	5	957	765	638	7
10	235,3	1	5	980	784	654	7

4 UREA 46% N PRILLS (Ps= 0.75)

Opening lever	kg/min	Blade position		Speed (km/h)			Border deflector position.
				8	10	12	
		A	B	kg/ha			
1	6,0	1	2	25	20	17	0
1,5	11,9	1	2	50	40	33	0
2	19,8	1	2	82	66	55	0
2,5	28,3	1	3	118	94	79	0
3	38,6	1	3	161	129	107	0
3,5	49,8	1	3	207	166	138	0
4	62,2	1	4	259	207	173	0
4,5	74,1	1	4	309	247	206	0
5	87,0	1	4	363	290	242	0
5,5	101,1	2	4	421	337	281	0
6	117,2	2	4	488	391	326	0
6,5	132,2	2	4	551	441	367	0
7	147,8	2	4	616	493	411	0
7,5	165,1	2	4	688	550	459	0
8	183,8	2	4	766	613	511	0
8,5	203,1	2	4	846	677	564	0
9	222,7	2	4	928	742	619	0
9,5	240,0	2	4	1000	800	667	0
10	253,0	2	4	1054	843	703	0

5 UREA PIAGRAN 46 (Ps= 0.78 g/l)

Opening lever	kg/min	Blade position		Speed (km/h)			Border deflector position.
				8	10	12	
		A	B	kg/ha			
1	3,7	1	3	16	12	10	7
1,5	7,4	1	3	31	25	21	7
2	11,8	1	3	49	39	33	7
2,5	17,5	2	3	73	58	49	7
3	20,3	2	4	85	68	56	7
3,5	22,8	2	4	95	76	63	7
4	34,0	2	4	142	113	94	7
4,5	47,0	2	4	196	157	131	7
5	61,8	3	4	258	206	172	7
5,5	70,2	3	4	293	234	195	7
6	84,2	3	4	351	281	234	7
6,5	95,7	3	4	399	319	266	7
7	108,8	4	4	453	363	302	7
7,5	121,5	4	4	506	405	338	7
8	135,3	4	4	564	451	376	7
8,5	149,5	4	4	623	498	415	7
9	163,9	4	4	683	546	455	7
9,5	176,7	4	5	736	589	491	7
10	186,2	4	5	776	621	517	7

For the border spreading keep a distance from the edge of the field of 9 meters from the central tractor axe and provide for a 30% reduction of fertilizer dose on the border side.

NORMAL SPREADING

24 Metres

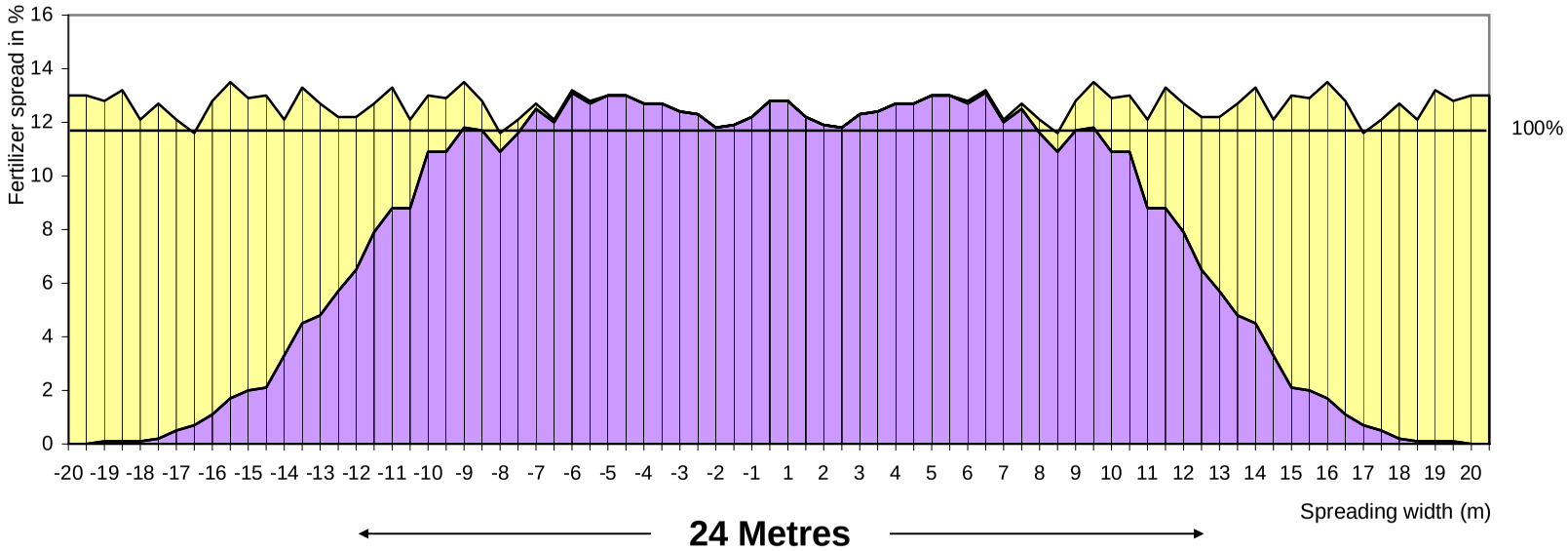

Type of blade to be assembled

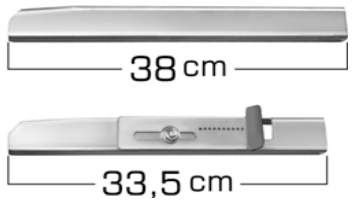

See table on side to adjust the blade

See table on side to adjust the opening lever

ADJUSTMENT TABLE

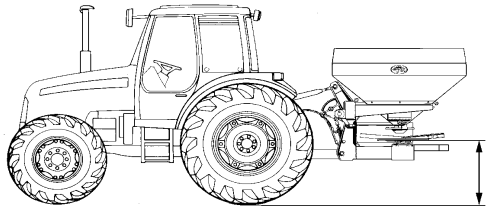

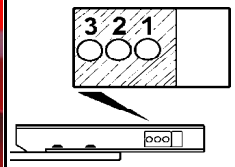

			N° holes per blade	P.T.O Rev/min
1	KORN - KALI 40/6	E	4	540
2	NS 24 - 6	E	4	540
3	NPK 21 - 3 - 10	E	4	540
4	UREA 46% N PRILLS (Ps= 0.75)	***	***	***
5	UREA PIAGRAN 46 (Ps= 0.78 g/l)	***	***	***

NORMAL SPREADING

24 Metres

1 KORN - KALI 40/6

Opening lever	kg/min	Blade position		Speed (km/h)			Border deflector position.
				8	10	12	
		A	B	kg/ha			
1	0,0	1	2	0	0	0	1
1,5	8,7	1	2	27	22	18	1
2	11,0	1	2	35	28	23	1
2,5	22,2	1	2	69	56	46	1
3	33,6	1	2	105	84	70	1
3,5	43,8	1	1	137	110	91	1
4	56,6	1	1	177	142	118	1
4,5	69,6	1	1	218	174	145	1
5	84,2	1	1	263	210	175	1
5,5	98,6	1	1	308	247	205	1
6	113,5	1	1	355	284	237	1
6,5	129,2	1	1	404	323	269	1
7	145,1	1	1	454	363	302	1
7,5	161,4	1	1	504	404	336	1
8	175,4	1	1	548	439	365	1
8,5	193,0	1	1	603	483	402	1
9	206,2	1	1	644	516	430	1
9,5	213,6	1	1	668	534	445	1
10	216,4	1	1	676	541	451	1

2 NS 24 - 6

Opening lever	kg/min	Blade position		Speed (km/h)			Border deflector position.
				8	10	12	
		A	B	kg/ha			
1	2,8	1	2	9	7	6	3
1,5	5,4	1	2	17	14	11	3
2	13,6	1	2	43	34	28	3
2,5	21,0	1	2	66	53	44	3
3	29,7	1	2	93	74	62	3
3,5	39,6	1	1	124	99	83	3
4	51,0	1	1	159	128	106	3
4,5	62,6	1	1	196	157	130	3
5	75,2	1	1	235	188	157	3
5,5	88,6	1	1	277	222	185	2
6	102,7	1	1	321	257	214	2
6,5	117,0	1	1	366	293	244	2
7	131,8	1	1	412	330	275	2
7,5	149,6	1	1	468	374	312	2
8	166,0	1	1	519	415	346	2
8,5	178,0	1	1	556	445	371	2
9	189,4	1	1	592	474	395	2
9,5	201,0	1	1	628	503	419	2
10	210,0	1	1	656	525	438	2

3 NPK 21 - 3 - 10

Opening lever	kg/min	Blade position		Speed (km/h)			Border deflector position.
				8	10	12	
		A	B	kg/ha			
1	3,1	1	2	10	8	6	3
1,5	5,8	1	2	18	15	12	3
2	15,1	1	2	47	38	31	3
2,5	24,8	1	2	78	62	52	3
3	34,4	1	2	108	86	72	3
3,5	46,8	1	1	146	117	98	3
4	59,2	1	1	185	148	123	3
4,5	74,0	1	1	231	185	154	3
5	88,6	1	1	277	221	185	3
5,5	104,8	1	1	328	262	218	3
6	121,0	1	1	378	303	252	3
6,5	139,4	1	1	436	349	290	3
7	157,3	1	1	491	393	328	3
7,5	177,0	1	1	553	443	369	3
8	196,9	1	1	615	492	410	3
8,5	210,4	1	1	658	526	438	3
9	224,0	1	1	700	560	467	3
9,5	229,6	1	1	718	574	478	3
10	235,3	1	1	735	588	490	3

4 UREA 46% N PRILLS (Ps= 0.75)

Opening lever	kg/min	Blade position		Speed (km/h)			Border deflector position.
				8	10	12	
		A	B	kg/ha			
1	***	***	***	***	***	***	***
1,5	***	***	***	***	***	***	***
2	***	***	***	***	***	***	***
2,5	***	***	***	***	***	***	***
3	***	***	***	***	***	***	***
3,5	***	***	***	***	***	***	***
4	***	***	***	***	***	***	***
4,5	***	***	***	***	***	***	***
5	***	***	***	***	***	***	***
5,5	***	***	***	***	***	***	***
6	***	***	***	***	***	***	***
6,5	***	***	***	***	***	***	***
7	***	***	***	***	***	***	***
7,5	***	***	***	***	***	***	***
8	***	***	***	***	***	***	***
8,5	***	***	***	***	***	***	***
9	***	***	***	***	***	***	***
9,5	***	***	***	***	***	***	***
10	***	***	***	***	***	***	***

5 UREA PIAGRAN 46 (Ps= 0.78 g/l)

Opening lever	kg/min	Blade position		Speed (km/h)			Border deflector position.
				8	10	12	
		A	B	kg/ha			
1	***	***	***	***	***	***	***
1,5	***	***	***	***	***	***	***
2	***	***	***	***	***	***	***
2,5	***	***	***	***	***	***	***
3	***	***	***	***	***	***	***
3,5	***	***	***	***	***	***	***
4	***	***	***	***	***	***	***
4,5	***	***	***	***	***	***	***
5	***	***	***	***	***	***	***
5,5	***	***	***	***	***	***	***
6	***	***	***	***	***	***	***
6,5	***	***	***	***	***	***	***
7	***	***	***	***	***	***	***
7,5	***	***	***	***	***	***	***
8	***	***	***	***	***	***	***
8,5	***	***	***	***	***	***	***
9	***	***	***	***	***	***	***
9,5	***	***	***	***	***	***	***
10	***	***	***	***	***	***	***

For the border spreading keep a distance from the edge of the field of 12 meters from the central tractor axe and provide for a 30% reduction of fertilizer dose on the border side.

LATE TOP SPREADING

12 Metres

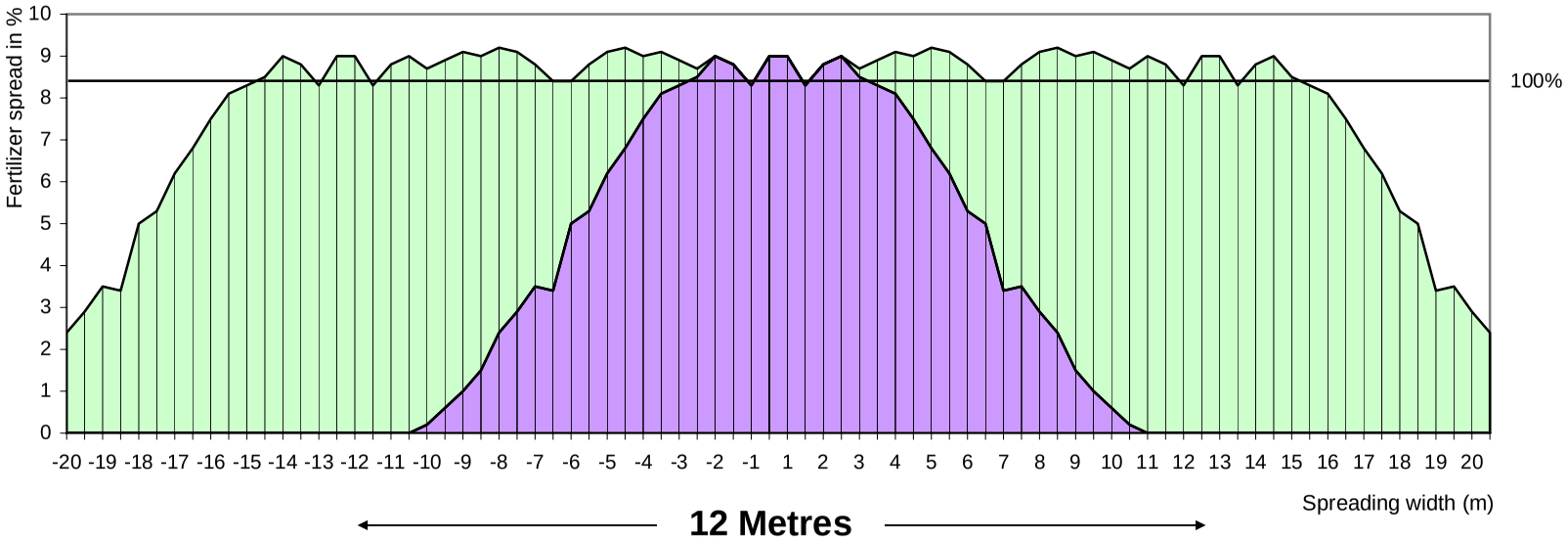

Type of blade to be assembled

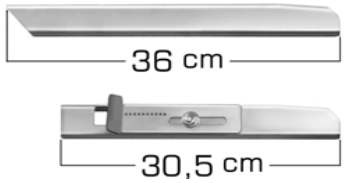

See table on side to adjust the blade

See table on side to adjust the opening lever

ADJUSTMENT TABLE

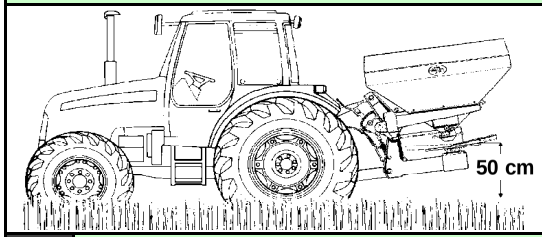

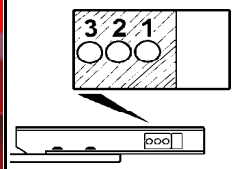

			N° holes per blade	P.T.O Rev/min
1	KORN - KALI 40/6	A	7	500
2	NS 24 - 6	A	7	500
3	NPK 21 - 3 - 10	A	7	500
4	UREA 46% N PRILLS (Ps= 0.75)	***	***	***
5	UREA PIAGRAN 46 (Ps= 0.78 g/l)	***	***	***

LATE TOP SPREADING

12 Metres

1 KORN - KALI 40/6

Opening lever	kg/min	Blade position A	Blade position B	Speed (km/h) 8 kg/ha	Speed (km/h) 10 kg/ha	Speed (km/h) 12 kg/ha	T	Border deflector position.
1	0,0	3	5	0	0	0	4	3
1,5	8,7	3	5	55	44	55	4	3
2	11,0	3	5	69	55	69	4	3
2,5	22,2	3	5	139	111	139	4	3
3	33,6	3	5	210	168	210	4	3
3,5	43,8	3	5	274	219	274	4	3
4	56,6	3	5	354	283	354	4	3
4,5	69,6	3	5	435	348	435	4	3
5	84,2	3	5	526	421	526	4	3
5,5	98,6	4	5	616	493	616	4	3
6	113,5	4	5	710	568	710	4	3
6,5	129,2	4	5	808	646	808	4	3
7	145,1	4	5	907	726	907	4	3
7,5	161,4	4	5	1009	807	1009	4	3
8	175,4	4	5	1096	877	1096	4	3
8,5	193,0	4	5	1206	965	1206	4	3
9	206,2	4	5	1289	1031	1289	4	3
9,5	213,6	4	5	1335	1068	1335	4	3
10	216,4	4	5	1353	1082	1353	4	3

2 NS 24 - 6

Opening lever	kg/min	Blade position A	Blade position B	Speed (km/h) 8 kg/ha	Speed (km/h) 10 kg/ha	Speed (km/h) 12 kg/ha	T	Border deflector position.
1	2,8	3	5	18	14	12	4	10
1,5	5,4	3	5	34	27	23	4	10
2	13,6	3	5	85	68	57	4	10
2,5	21,0	3	5	131	105	88	4	10
3	29,7	3	5	186	149	124	4	10
3,5	39,6	3	5	248	198	165	4	10
4	51,0	3	5	319	255	213	4	10
4,5	62,6	3	5	391	313	261	4	10
5	75,2	3	5	470	376	313	4	10
5,5	88,6	4	5	554	443	369	4	10
6	102,7	4	5	642	514	428	4	10
6,5	117,0	4	5	731	585	488	4	5
7	131,8	4	5	824	659	549	4	5
7,5	149,6	4	5	935	748	623	4	5
8	166,0	4	5	1038	830	692	4	5
8,5	178,0	4	5	1113	890	742	4	5
9	189,4	4	5	1184	947	789	4	5
9,5	201,0	4	5	1256	1005	838	4	5
10	210,0	4	5	1313	1050	875	4	5

3 NPK 21 - 3 - 10

Opening lever	kg/min	Blade position A	Blade position B	Speed (km/h) 8 kg/ha	Speed (km/h) 10 kg/ha	Speed (km/h) 12 kg/ha	T	Border deflector position.
1	3,1	3	5	19	15	13	4	5
1,5	5,8	3	5	36	29	24	4	5
2	15,1	3	5	94	76	63	4	5
2,5	24,8	3	5	155	124	103	4	5
3	34,4	3	5	215	172	143	4	5
3,5	46,8	3	5	293	234	195	4	5
4	59,2	3	5	370	296	247	4	5
4,5	74,0	3	5	463	370	308	4	5
5	88,6	3	5	554	443	369	4	5
5,5	104,8	4	5	655	524	437	4	5
6	121,0	4	5	757	605	504	4	5
6,5	139,4	4	5	871	697	581	4	5
7	157,3	4	5	983	786	655	4	5
7,5	177,0	4	5	1106	885	738	4	5
8	196,9	4	5	1231	985	820	4	5
8,5	210,4	4	5	1315	1052	877	4	5
9	224,0	4	5	1400	1120	933	4	5
9,5	229,6	4	5	1435	1148	957	4	5
10	235,3	4	5	1471	1177	980	4	5

4 UREA 46% N PRILLS (Ps= 0.75)

Opening lever	kg/min	Blade position A	Blade position B	Speed (km/h) 8 kg/ha	Speed (km/h) 10 kg/ha	Speed (km/h) 12 kg/ha	T	Border deflector position.
1	***	***	***	***	***	***	***	***
1,5	***	***	***	***	***	***	***	***
2	***	***	***	***	***	***	***	***
2,5	***	***	***	***	***	***	***	***
3	***	***	***	***	***	***	***	***
3,5	***	***	***	***	***	***	***	***
4	***	***	***	***	***	***	***	***
4,5	***	***	***	***	***	***	***	***
5	***	***	***	***	***	***	***	***
5,5	***	***	***	***	***	***	***	***
6	***	***	***	***	***	***	***	***
6,5	***	***	***	***	***	***	***	***
7	***	***	***	***	***	***	***	***
7,5	***	***	***	***	***	***	***	***
8	***	***	***	***	***	***	***	***
8,5	***	***	***	***	***	***	***	***
9	***	***	***	***	***	***	***	***
9,5	***	***	***	***	***	***	***	***
10	***	***	***	***	***	***	***	***

5 UREA PIAGRAN 46 (Ps= 0.78 g/l)

Opening lever	kg/min	Blade position A	Blade position B	Speed (km/h) 8 kg/ha	Speed (km/h) 10 kg/ha	Speed (km/h) 12 kg/ha	T	Border deflector position.
1	***	***	***	***	***	***	***	***
1,5	***	***	***	***	***	***	***	***
2	***	***	***	***	***	***	***	***
2,5	***	***	***	***	***	***	***	***
3	***	***	***	***	***	***	***	***
3,5	***	***	***	***	***	***	***	***
4	***	***	***	***	***	***	***	***
4,5	***	***	***	***	***	***	***	***
5	***	***	***	***	***	***	***	***
5,5	***	***	***	***	***	***	***	***
6	***	***	***	***	***	***	***	***
6,5	***	***	***	***	***	***	***	***
7	***	***	***	***	***	***	***	***
7,5	***	***	***	***	***	***	***	***
8	***	***	***	***	***	***	***	***
8,5	***	***	***	***	***	***	***	***
9	***	***	***	***	***	***	***	***
9,5	***	***	***	***	***	***	***	***
10	***	***	***	***	***	***	***	***

For the border spreading keep a distance from the edge of the field of 6 meters from the central tractor axe and provide for a 30% reduction of fertilizer dose on the border side.

LATE TOP SPREADING

15 Metres

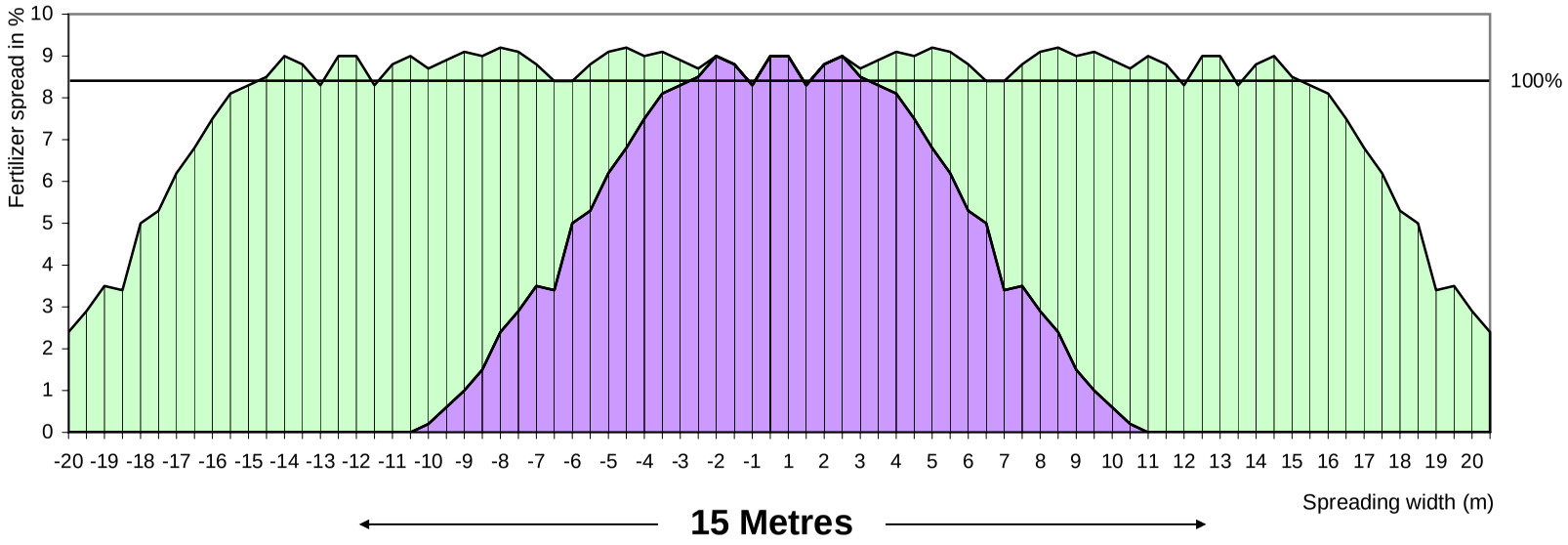

Type of blade to be assembled

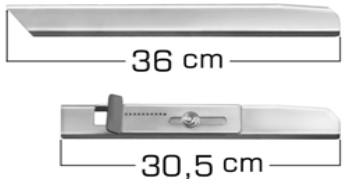

See table on side to adjust the blade

See table on side to adjust the opening lever

ADJUSTMENT TABLE

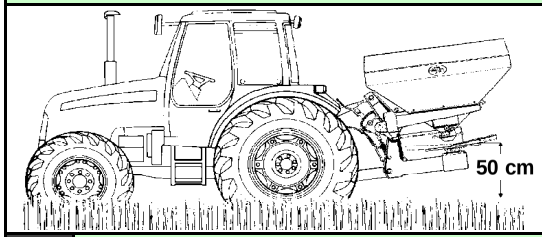

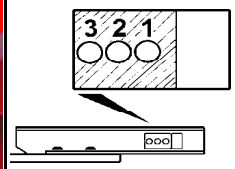

			N° holes per blade	P.T.O Rev/min
1	KORN - KALI 40/6	B	6	520
2	NS 24 - 6	B	6	520
3	NPK 21 - 3 - 10	C	6	520
4	UREA 46% N PRILLS (Ps= 0.75)	***	***	***
5	UREA PIAGRAN 46 (Ps= 0.78 g/l)	***	***	***

LATE TOP SPREADING

15 Metres

1 KORN - KALI 40/6

Opening lever	kg/min	Blade position A	Blade position B	Speed (km/h) 8 kg/ha	Speed (km/h) 10 kg/ha	Speed (km/h) 12 kg/ha	T	Border deflector position.
1	0,0	3	5	0	0	0	4	3
1,5	8,7	3	5	44	35	29	4	3
2	11,0	3	5	55	44	37	4	3
2,5	22,2	3	5	111	89	74	4	3
3	33,6	3	5	168	134	112	4	3
3,5	43,8	3	5	219	175	146	4	3
4	56,6	3	5	283	226	189	4	3
4,5	69,6	3	5	348	278	232	4	3
5	84,2	3	5	421	337	281	4	3
5,5	98,6	4	5	493	394	329	4	3
6	113,5	4	5	568	454	378	4	3
6,5	129,2	4	5	646	517	431	4	3
7	145,1	4	5	726	581	484	4	3
7,5	161,4	4	5	807	646	538	4	3
8	175,4	4	5	877	702	585	4	3
8,5	193,0	4	5	965	772	643	4	3
9	206,2	4	5	1031	825	687	4	3
9,5	213,6	4	5	1068	854	712	4	3
10	216,4	4	5	1082	866	721	4	3

2 NS 24 - 6

Opening lever	kg/min	Blade position A	Blade position B	Speed (km/h) 8 kg/ha	Speed (km/h) 10 kg/ha	Speed (km/h) 12 kg/ha	T	Border deflector position.
1	2,8	3	5	14	11	9	4	10
1,5	5,4	3	5	27	22	18	4	10
2	13,6	3	5	68	54	45	4	10
2,5	21,0	3	5	105	84	70	4	10
3	29,7	3	5	149	119	99	4	10
3,5	39,6	3	5	198	158	132	4	10
4	51,0	3	5	255	204	170	4	10
4,5	62,6	3	5	313	250	209	4	10
5	75,2	3	5	376	301	251	4	10
5,5	88,6	4	5	443	354	295	4	10
6	102,7	4	5	514	411	342	4	10
6,5	117,0	4	5	585	468	390	4	5
7	131,8	4	5	659	527	439	4	5
7,5	149,6	4	5	748	598	499	4	5
8	166,0	4	5	830	664	553	4	5
8,5	178,0	4	5	890	712	593	4	5
9	189,4	4	5	947	758	631	4	5
9,5	201,0	4	5	1005	804	670	4	5
10	210,0	4	5	1050	840	700	4	5

3 NPK 21 - 3 - 10

Opening lever	kg/min	Blade position A	Blade position B	Speed (km/h) 8 kg/ha	Speed (km/h) 10 kg/ha	Speed (km/h) 12 kg/ha	T	Border deflector position.
1	3,1	3	5	15	12	10	4	5
1,5	5,8	3	5	29	23	19	4	5
2	15,1	3	5	76	60	50	4	5
2,5	24,8	3	5	124	99	83	4	5
3	34,4	3	5	172	138	115	4	5
3,5	46,8	3	5	234	187	156	4	5
4	59,2	3	5	296	237	197	4	5
4,5	74,0	3	5	370	296	247	4	5
5	88,6	3	5	443	354	295	4	5
5,5	104,8	4	5	524	419	349	4	5
6	121,0	4	5	605	484	403	4	5
6,5	139,4	4	5	697	558	465	4	5
7	157,3	4	5	786	629	524	4	5
7,5	177,0	4	5	885	708	590	4	5
8	196,9	4	5	985	788	656	4	5
8,5	210,4	4	5	1052	842	701	4	5
9	224,0	4	5	1120	896	747	4	5
9,5	229,6	4	5	1148	918	765	4	5
10	235,3	4	5	1177	941	784	4	5

4 UREA 46% N PRILLS (Ps= 0.75)

Opening lever	kg/min	Blade position A	Blade position B	Speed (km/h) 8 kg/ha	Speed (km/h) 10 kg/ha	Speed (km/h) 12 kg/ha	T	Border deflector position.
1	***	***	***	***	***	***	***	***
1,5	***	***	***	***	***	***	***	***
2	***	***	***	***	***	***	***	***
2,5	***	***	***	***	***	***	***	***
3	***	***	***	***	***	***	***	***
3,5	***	***	***	***	***	***	***	***
4	***	***	***	***	***	***	***	***
4,5	***	***	***	***	***	***	***	***
5	***	***	***	***	***	***	***	***
5,5	***	***	***	***	***	***	***	***
6	***	***	***	***	***	***	***	***
6,5	***	***	***	***	***	***	***	***
7	***	***	***	***	***	***	***	***
7,5	***	***	***	***	***	***	***	***
8	***	***	***	***	***	***	***	***
8,5	***	***	***	***	***	***	***	***
9	***	***	***	***	***	***	***	***
9,5	***	***	***	***	***	***	***	***
10	***	***	***	***	***	***	***	***

5 UREA PIAGRAN 46 (Ps= 0.78 g/l)

Opening lever	kg/min	Blade position A	Blade position B	Speed (km/h) 8 kg/ha	Speed (km/h) 10 kg/ha	Speed (km/h) 12 kg/ha	T	Border deflector position.
1	***	***	***	***	***	***	***	***
1,5	***	***	***	***	***	***	***	***
2	***	***	***	***	***	***	***	***
2,5	***	***	***	***	***	***	***	***
3	***	***	***	***	***	***	***	***
3,5	***	***	***	***	***	***	***	***
4	***	***	***	***	***	***	***	***
4,5	***	***	***	***	***	***	***	***
5	***	***	***	***	***	***	***	***
5,5	***	***	***	***	***	***	***	***
6	***	***	***	***	***	***	***	***
6,5	***	***	***	***	***	***	***	***
7	***	***	***	***	***	***	***	***
7,5	***	***	***	***	***	***	***	***
8	***	***	***	***	***	***	***	***
8,5	***	***	***	***	***	***	***	***
9	***	***	***	***	***	***	***	***
9,5	***	***	***	***	***	***	***	***
10	***	***	***	***	***	***	***	***

For the border spreading keep a distance from the edge of the field of 7,5 meters from the central tractor axe and provide for a 30% reduction of fertilizer dose on the border side.

LATE TOP SPREADING

18 Metres

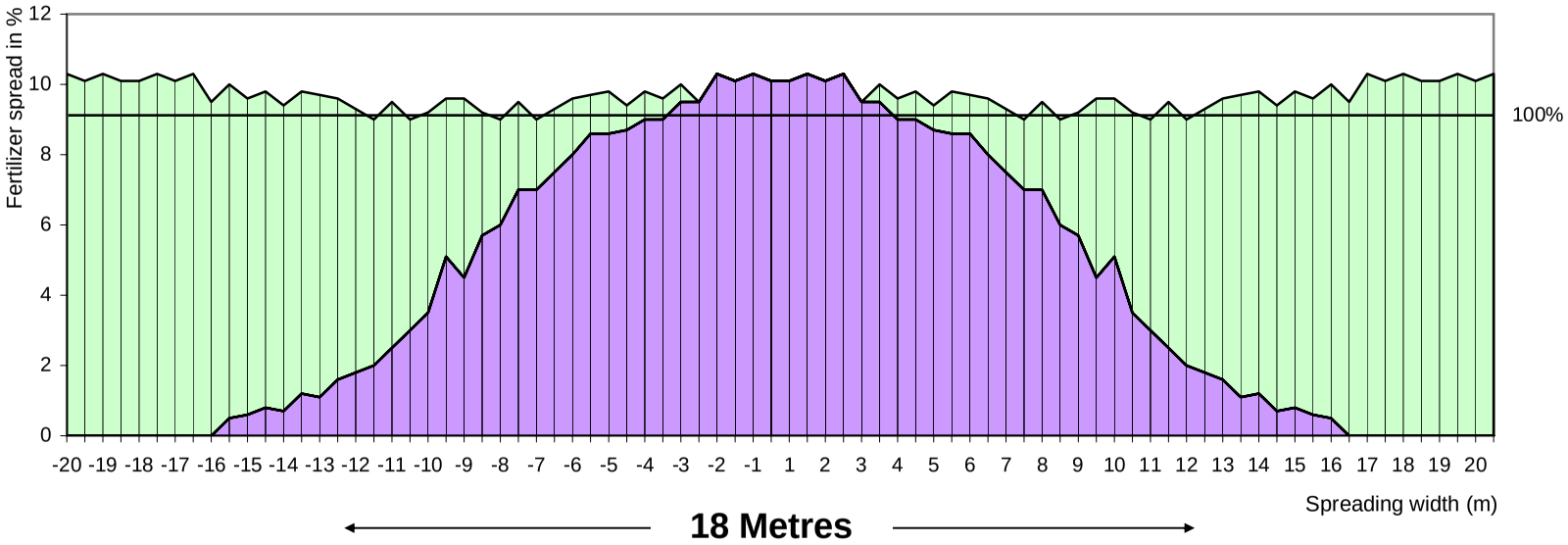

Type of blade to be assembled

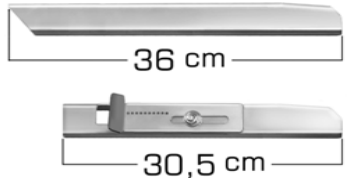

See table on side to adjust the blade

See table on side to adjust the opening lever

ADJUSTMENT TABLE

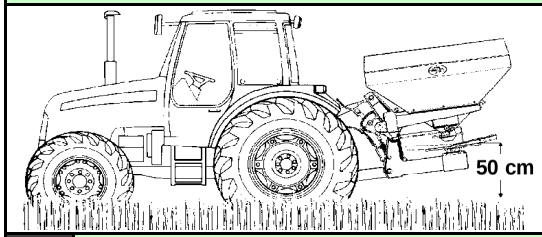

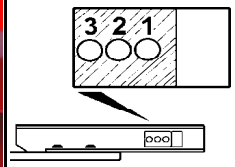

			N° holes per blade	P.T.O Rev/min
1	KORN - KALI 40/6	C	5	540
2	NS 24 - 6	C	5	540
3	NPK 21 - 3 - 10	D	5	540
4	UREA 46% N PRILLS (Ps= 0.75)	***	***	***
5	UREA PIAGRAN 46 (Ps= 0.78 g/l)	***	***	***

LATE TOP SPREADING

18 Metres

1 KORN - KALI 40/6

Opening lever	kg/min	Blade position A	Blade position B	Speed (km/h) 8 kg/ha	Speed (km/h) 10 kg/ha	Speed (km/h) 12 kg/ha	T	Border deflector position.
1	0,0	\\	\\	0	0	0	\\	***
1,5	8,7	\\	\\	36	29	24	\\	***
2	11,0	\\	\\	46	37	31	\\	***
2,5	22,2	\\	\\	93	74	62	\\	***
3	33,6	\\	\\	140	112	93	\\	***
3,5	43,8	\\	\\	183	146	122	\\	***
4	56,6	\\	\\	236	189	157	\\	***
4,5	69,6	\\	\\	290	232	193	\\	***
5	84,2	\\	\\	351	281	234	\\	***
5,5	98,6	\\	\\	411	329	274	\\	***
6	113,5	\\	\\	473	378	315	\\	***
6,5	129,2	\\	\\	538	431	359	\\	***
7	145,1	\\	\\	605	484	403	\\	***
7,5	161,4	\\	\\	673	538	448	\\	***
8	175,4	\\	\\	731	585	487	\\	***
8,5	193,0	\\	\\	804	643	536	\\	***
9	206,2	\\	\\	859	687	573	\\	***
9,5	213,6	\\	\\	890	712	593	\\	***
10	216,4	\\	\\	902	721	601	\\	***

2 NS 24 - 6

Opening lever	kg/min	Blade position A	Blade position B	Speed (km/h) 8 kg/ha	Speed (km/h) 10 kg/ha	Speed (km/h) 12 kg/ha	T	Border deflector position.
1	2,8	1	3	12	9	8	4	10
1,5	5,4	1	3	23	18	15	4	10
2	13,6	1	3	57	45	38	4	10
2,5	21,0	1	3	88	70	58	4	10
3	29,7	1	3	124	99	83	4	10
3,5	39,6	1	2	165	132	110	4	10
4	51,0	1	2	213	170	142	4	10
4,5	62,6	1	2	261	209	174	4	10
5	75,2	1	2	313	251	209	4	10
5,5	88,6	1	2	369	295	246	4	10
6	102,7	1	2	428	342	285	4	10
6,5	117,0	1	2	488	390	325	4	10
7	131,8	1	2	549	439	366	4	10
7,5	149,6	1	2	623	499	416	4	10
8	166,0	1	2	692	553	461	4	10
8,5	178,0	\\	\\	742	593	494	\\	10
9	189,4	\\	\\	789	631	526	\\	10
9,5	201,0	\\	\\	838	670	558	\\	10
10	210,0	\\	\\	875	700	583	\\	10

3 NPK 21 - 3 - 10

Opening lever	kg/min	Blade position A	Blade position B	Speed (km/h) 8 kg/ha	Speed (km/h) 10 kg/ha	Speed (km/h) 12 kg/ha	T	Border deflector position.
1	3,1	1	1	13	10	9	4	7
1,5	5,8	1	1	24	19	16	4	7
2	15,1	1	1	63	50	42	4	7
2,5	24,8	1	1	103	83	69	4	7
3	34,4	1	1	143	115	96	4	7
3,5	46,8	1	1	195	156	130	4	7
4	59,2	1	1	247	197	165	4	7
4,5	74,0	1	1	308	247	206	4	7
5	88,6	1	1	369	295	246	4	7
5,5	104,8	1	1	437	349	291	4	7
6	121,0	1	1	504	403	336	4	7
6,5	139,4	1	1	581	465	387	4	7
7	157,3	1	1	655	524	437	4	7
7,5	177,0	1	1	738	590	492	4	7
8	196,9	1	1	820	656	547	4	7
8,5	210,4	\\	\\	877	701	584	\\	7
9	224,0	\\	\\	933	747	622	\\	7
9,5	229,6	\\	\\	957	765	638	\\	7
10	235,3	\\	\\	980	784	654	\\	7

4 UREA 46% N PRILLS (Ps= 0.75)

Opening lever	kg/min	Blade position A	Blade position B	Speed (km/h) 8 kg/ha	Speed (km/h) 10 kg/ha	Speed (km/h) 12 kg/ha	T	Border deflector position.
1	***	***	***	***	***	***	***	***
1,5	***	***	***	***	***	***	***	***
2	***	***	***	***	***	***	***	***
2,5	***	***	***	***	***	***	***	***
3	***	***	***	***	***	***	***	***
3,5	***	***	***	***	***	***	***	***
4	***	***	***	***	***	***	***	***
4,5	***	***	***	***	***	***	***	***
5	***	***	***	***	***	***	***	***
5,5	***	***	***	***	***	***	***	***
6	***	***	***	***	***	***	***	***
6,5	***	***	***	***	***	***	***	***
7	***	***	***	***	***	***	***	***
7,5	***	***	***	***	***	***	***	***
8	***	***	***	***	***	***	***	***
8,5	***	***	***	***	***	***	***	***
9	***	***	***	***	***	***	***	***
9,5	***	***	***	***	***	***	***	***
10	***	***	***	***	***	***	***	***

5 UREA PIAGRAN 46 (Ps= 0.78 g/l)

Opening lever	kg/min	Blade position A	Blade position B	Speed (km/h) 8 kg/ha	Speed (km/h) 10 kg/ha	Speed (km/h) 12 kg/ha	T	Border deflector position.
1	***	***	***	***	***	***	***	***
1,5	***	***	***	***	***	***	***	***
2	***	***	***	***	***	***	***	***
2,5	***	***	***	***	***	***	***	***
3	***	***	***	***	***	***	***	***
3,5	***	***	***	***	***	***	***	***
4	***	***	***	***	***	***	***	***
4,5	***	***	***	***	***	***	***	***
5	***	***	***	***	***	***	***	***
5,5	***	***	***	***	***	***	***	***
6	***	***	***	***	***	***	***	***
6,5	***	***	***	***	***	***	***	***
7	***	***	***	***	***	***	***	***
7,5	***	***	***	***	***	***	***	***
8	***	***	***	***	***	***	***	***
8,5	***	***	***	***	***	***	***	***
9	***	***	***	***	***	***	***	***
9,5	***	***	***	***	***	***	***	***
10	***	***	***	***	***	***	***	***

For the border spreading keep a distance from the edge of the field of 9 meters from the central tractor axe and provide for a 30% reduction of fertilizer dose on the border side.

LATE TOP SPREADING

24 Metres

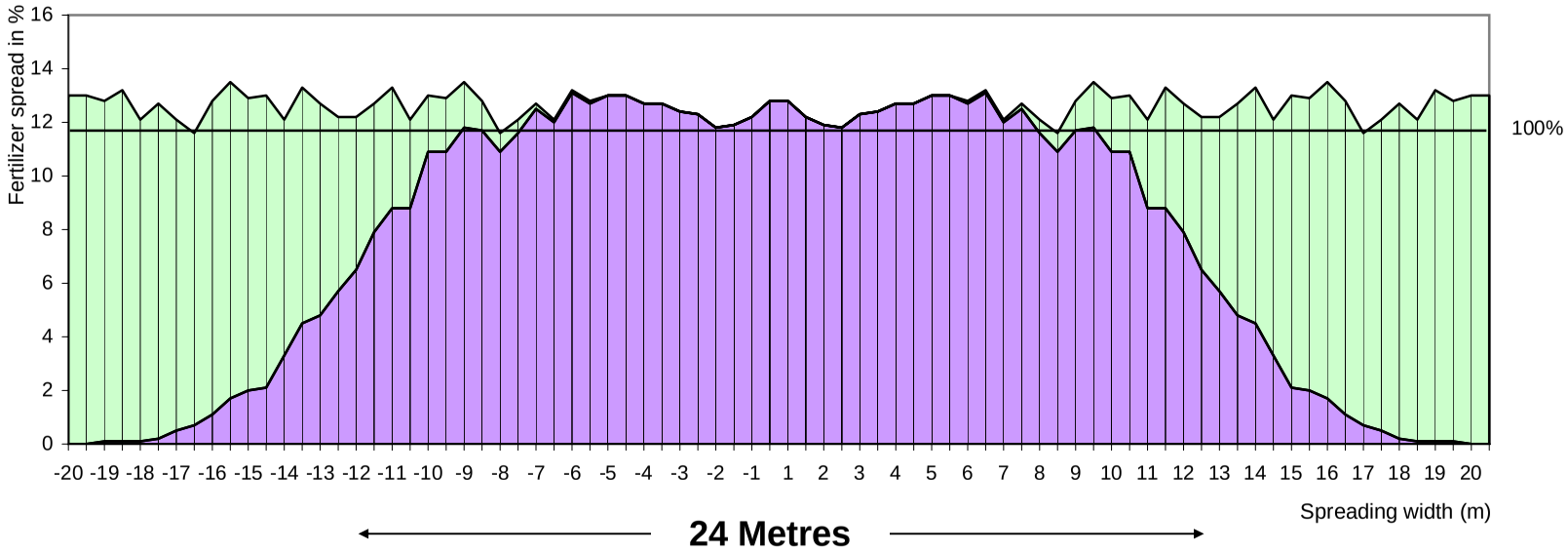

Type of blade to be assembled

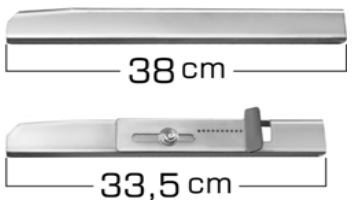

See table on side to adjust the blade

See table on side to adjust the opening lever

ADJUSTMENT TABLE

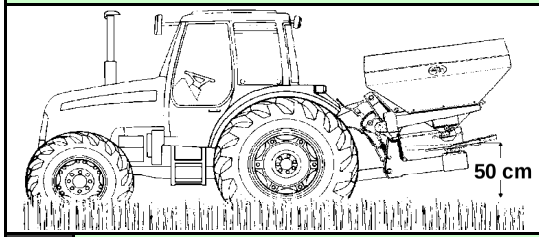

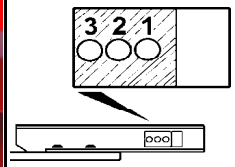

			N° holes per blade	P.T.O Rev/min
1	KORN - KALI 40/6	E	4	540
2	NS 24 - 6	E	4	540
3	NPK 21 - 3 - 10	E	4	540
4	UREA 46% N PRILLS (Ps= 0.75)	***	***	***
5	UREA PIAGRAN 46 (Ps= 0.78 g/l)	***	***	***

LATE TOP SPREADING

24 Metres

1 KORN - KALI 40/6

Opening lever	kg/min	Blade position A	Blade position B	Speed (km/h) 8 kg/ha	Speed (km/h) 10 kg/ha	Speed (km/h) 12 kg/ha	T	Border deflector position.
1	0,0	1	2	0	0	0	4	1
1,5	8,7	1	2	27	22	18	4	1
2	11,0	1	2	35	28	23	4	1
2,5	22,2	1	2	69	56	46	4	1
3	33,6	1	2	105	84	70	4	1
3,5	43,8	1	1	137	110	91	4	1
4	56,6	1	1	177	142	118	4	1
4,5	69,6	1	1	218	174	145	4	1
5	84,2	1	1	263	210	175	4	1
5,5	98,6	1	1	308	247	205	4	1
6	113,5	1	1	355	284	237	4	1
6,5	129,2	1	1	404	323	269	4	1
7	145,1	1	1	454	363	302	4	1
7,5	161,4	1	1	504	404	336	4	1
8	175,4	1	1	548	439	365	4	1
8,5	193,0	1	1	603	483	402	4	1
9	206,2	1	1	644	516	430	4	1
9,5	213,6	1	1	668	534	445	4	1
10	216,4	1	1	676	541	451	4	1

2 NS 24 - 6

Opening lever	kg/min	Blade position A	Blade position B	Speed (km/h) 8 kg/ha	Speed (km/h) 10 kg/ha	Speed (km/h) 12 kg/ha	T	Border deflector position.
1	2,8	1	2	9	7	6	4	3
1,5	5,4	1	2	17	14	11	4	3
2	13,6	1	2	43	34	28	4	3
2,5	21,0	1	2	66	53	44	4	3
3	29,7	1	2	93	74	62	4	3
3,5	39,6	1	1	124	99	83	4	3
4	51,0	1	1	159	128	106	4	3
4,5	62,6	1	1	196	157	130	4	3
5	75,2	1	1	235	188	157	4	3
5,5	88,6	1	1	277	222	185	4	3
6	102,7	1	1	321	257	214	4	2
6,5	117,0	1	1	366	293	244	4	2
7	131,8	1	1	412	330	275	4	2
7,5	149,6	1	1	468	374	312	4	2
8	166,0	1	1	519	415	346	4	2
8,5	178,0	1	1	556	445	371	4	2
9	189,4	1	1	592	474	395	4	2
9,5	201,0	1	1	628	503	419	4	2
10	210,0	1	1	656	525	438	4	2

3 NPK 21 - 3 - 10

Opening lever	kg/min	Blade position A	Blade position B	Speed (km/h) 8 kg/ha	Speed (km/h) 10 kg/ha	Speed (km/h) 12 kg/ha	T	Border deflector position.
1	3,1	1	2	10	8	6	4	3
1,5	5,8	1	2	18	15	12	4	3
2	15,1	1	2	47	38	31	4	3
2,5	24,8	1	2	78	62	52	4	3
3	34,4	1	2	108	86	72	4	3
3,5	46,8	1	1	146	117	98	4	3
4	59,2	1	1	185	148	123	4	3
4,5	74,0	1	1	231	185	154	4	3
5	88,6	1	1	277	221	185	4	3
5,5	104,8	1	1	328	262	218	4	3
6	121,0	1	1	378	303	252	4	3
6,5	139,4	1	1	436	349	290	4	3
7	157,3	1	1	491	393	328	4	3
7,5	177,0	1	1	553	443	369	4	3
8	196,9	1	1	615	492	410	4	3
8,5	210,4	1	1	658	526	438	4	3
9	224,0	1	1	700	560	467	4	3
9,5	229,6	1	1	718	574	478	4	3
10	235,3	1	1	735	588	490	4	3

4 UREA 46% N PRILLS (Ps= 0.75)

Opening lever	kg/min	Blade position A	Blade position B	Speed (km/h) 8 kg/ha	Speed (km/h) 10 kg/ha	Speed (km/h) 12 kg/ha	T	Border deflector position.
1	***	***	***	***	***	***	***	***
1,5	***	***	***	***	***	***	***	***
2	***	***	***	***	***	***	***	***
2,5	***	***	***	***	***	***	***	***
3	***	***	***	***	***	***	***	***
3,5	***	***	***	***	***	***	***	***
4	***	***	***	***	***	***	***	***
4,5	***	***	***	***	***	***	***	***
5	***	***	***	***	***	***	***	***
5,5	***	***	***	***	***	***	***	***
6	***	***	***	***	***	***	***	***
6,5	***	***	***	***	***	***	***	***
7	***	***	***	***	***	***	***	***
7,5	***	***	***	***	***	***	***	***
8	***	***	***	***	***	***	***	***
8,5	***	***	***	***	***	***	***	***
9	***	***	***	***	***	***	***	***
9,5	***	***	***	***	***	***	***	***
10	***	***	***	***	***	***	***	***

5 UREA PIAGRAN 46 (Ps= 0.78 g/l)

Opening lever	kg/min	Blade position A	Blade position B	Speed (km/h) 8 kg/ha	Speed (km/h) 10 kg/ha	Speed (km/h) 12 kg/ha	T	Border deflector position.
1	***	***	***	***	***	***	***	***
1,5	***	***	***	***	***	***	***	***
2	***	***	***	***	***	***	***	***
2,5	***	***	***	***	***	***	***	***
3	***	***	***	***	***	***	***	***
3,5	***	***	***	***	***	***	***	***
4	***	***	***	***	***	***	***	***
4,5	***	***	***	***	***	***	***	***
5	***	***	***	***	***	***	***	***
5,5	***	***	***	***	***	***	***	***
6	***	***	***	***	***	***	***	***
6,5	***	***	***	***	***	***	***	***
7	***	***	***	***	***	***	***	***
7,5	***	***	***	***	***	***	***	***
8	***	***	***	***	***	***	***	***
8,5	***	***	***	***	***	***	***	***
9	***	***	***	***	***	***	***	***
9,5	***	***	***	***	***	***	***	***
10	***	***	***	***	***	***	***	***

For the border spreading keep a distance from the edge of the field of 12 meters from the central tractor axe and provide for a 30% reduction of fertilizer dose on the border side.

Agrex S.p.a.

Via Balla, 55/57

35010 Villafranca Padovana

(Padova) - Italia

Tel. +39 049 90 75 684

Fax. +39 049 90 75 524

Web Site: www.agrex.com

E-mail: info@agrex.com